Compal Confidential

PEW71/91/51 M/B Schematics Document

Intel Arrandale Processor with DDRIII + Ibex Peak-M
NV N11P-GV2H and N11P-GE

2010-06-07

REV:1.0

Security Classification	Compal Secret Data		
Issued Date	2009/08/01	Deciphered Date	2010/08/01

THIS SHEET OF ENGINEERING DRAWING IS THE PROPRIETARY PROPERTY OF COMPAL ELECTRONICS, INC. AND CONTAINS CONFIDENTIAL AND TRADE SECRET INFORMATION. THIS SHEET MAY NOT BE TRANSFERED FROM THE CUSTODY OF THE COMPETENT DIVISION OF R&D DEPARTMENT EXCEPT AS AUTHORIZED BY COMPAL ELECTRONICS, INC. NEITHER THIS SHEET NOR THE INFORMATION IT CONTAINS MAY BE USED BY OR DISCLOSED TO ANY THIRD PARTY WITHOUT PRIOR WRITTEN CONSENT OF COMPAL ELECTRONICS, INC.

Compal Electronics, Inc.

Title: SCHEMATICS,MB A5893

Size: Custom | Document Number: 401869 | Rev: C

Date: Wednesday, June 30, 2010 | Sheet 1 of 56

Compal Confidential

Model Name : NEW71/91
File Name : LA5893P

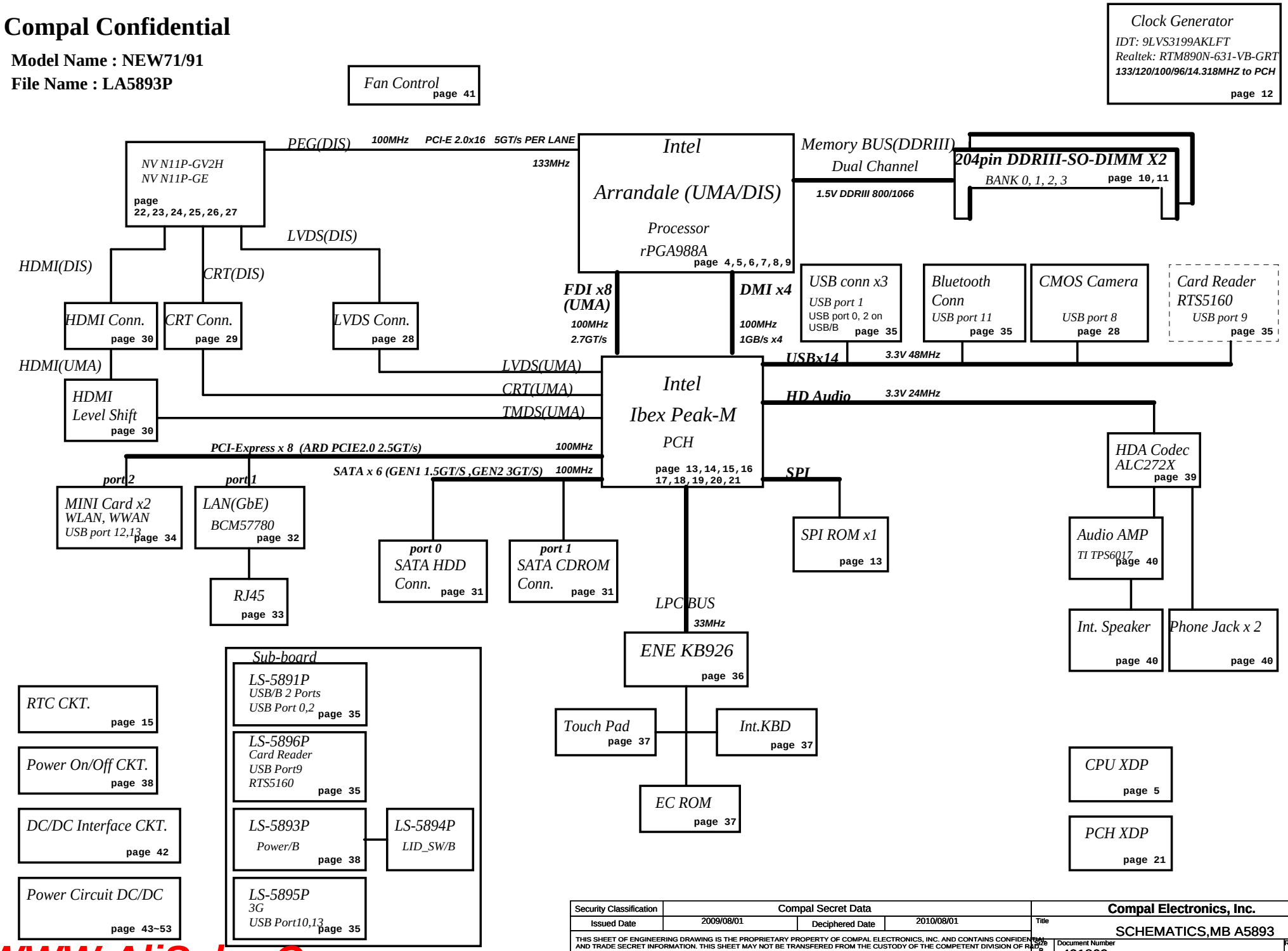

Security Classification	Compal Secret Data		
Issued Date	2009/08/01	Deciphered Date	2010/08/01

THIS SHEET OF ENGINEERING DRAWING IS THE PROPRIETARY PROPERTY OF COMPAL ELECTRONICS, INC. AND CONTAINS CONFIDENTIAL AND TRADE SECRET INFORMATION. THIS SHEET MAY NOT BE TRANSFERED FROM THE CUSTODY OF THE COMPETENT DIVISION OF R&D DEPARTMENT EXCEPT AS AUTHORIZED BY COMPAL ELECTRONICS, INC. NEITHER THIS SHEET NOR THE INFORMATION IT CONTAINS MAY BE USED BY OR DISCLOSED TO ANY THIRD PARTY WITHOUT PRIOR WRITTEN CONSENT OF COMPAL ELECTRONICS, INC.

Compal Electronics, Inc.

Title: SCHEMATICS,MB A5893

Size: B | Document Number: 401869 | Rev: C

Date: Wednesday, June 30, 2010 | Sheet 2 of 56

WWW.AliSaler.Com

Voltage Rails

Power Plane	Description	S1	S3	S5
VIN	Adapter power supply (19V)	N/A	N/A	N/A
BATT+	Battery power supply (12.6V)	N/A	N/A	N/A
B+	AC or battery power rail for power circuit.	N/A	N/A	N/A
+CPU_CORE	Core voltage for CPU	ON	OFF	OFF
+VGA_CORE	Core voltage for GPU	ON	OFF	OFF
+VGFX_CORE	Core voltage for Arrandale GPU (only for arrandaleCPU)	ON	OFF	OFF
+0.75VS	+0.75VP to +0.75VS switched power rail for DDR terminator	ON	OFF	OFF
+1.0VSDGPU	+1.0VSPDGPU to +1.0VSDGPU switched power rail for GPU	ON	OFF	OFF
+1.05VS_VTT	+1.05VS_VTTP to +1.05VS_VTT switched power rail for ARD CPU	ON	OFF	OFF
+1.05VS_PCH	+1.05VS_VTT to +1.05VS_PCH power for PCH	ON	OFF	OFF
+1.5V	+1.5VP to +1.5V power rail for DDRIII	ON	ON	OFF
+1.5VS	+1.5V to +1.5VS switched power rail	ON	OFF	OFF
+1.5VSDGPU	+1.5VS to +1.5VSDGPU switched power rail for GPU	ON	OFF	OFF
+1.8VS	(+5VALW or +3VALW) to 1.8V switched power rail to PCH & GPU	ON	OFF	OFF
+3VALW	+3VALW always on power rail	ON	ON	ON*
+3VALW_EC	+3VALW always to KBC	ON	ON	ON*
+3V_LAN	+3VALW to +3V_LAN power rail for LAN	ON	ON	ON*
+3V	+3VALW to +3V power rail for PCH (Short Jumper)	ON	ON	ON*
+3VS	+3VALW to +3VS power rail	ON	OFF	OFF
+5VALW	+5VALWP to +5VALW power rail	ON	ON	ON*
+5V	+5VALW to +5V switched power rail for PCH (Short resister)	ON	ON	ON*
+5VS	+5VALW to +5VS switched power rail	ON	OFF	OFF
+VSB	+VSBP to +VSB always on power rail for sequence control	ON	ON	ON*
+RTCVCC	RTC power	ON	ON	ON

Note : ON* means that this power plane is ON only with AC power available, otherwise it is OFF.

STATE \ SIGNAL	SLP_S1#	SLP_S3#	SLP_S4#	SLP_S5#	+VALW	+V	+VS	Clock
Full ON	HIGH	HIGH	HIGH	HIGH	ON	ON	ON	ON
S1(Power On Suspend)	LOW	HIGH	HIGH	HIGH	ON	ON	ON	LOW
S3 (Suspend to RAM)	LOW	LOW	HIGH	HIGH	ON	ON	OFF	OFF
S4 (Suspend to Disk)	LOW	LOW	LOW	HIGH	ON	OFF	OFF	OFF
S5 (Soft OFF)	LOW	LOW	LOW	LOW	ON	OFF	OFF	OFF

EC SM Bus1 address

Device	Address
Smart Battery	0001 011X b

EC SM Bus2 address

Device	Address

PCH SM Bus address

Device	Address
Clock Generator (9LVS3199AKLFT, RTM890N-631-VB-GRT)	1101 0010b
DDR DIMM0	1001 000Xb
DDR DIMM2	1001 010Xb

Board ID / SKU ID Table for AD channel

Vcc	3.3V +/- 5%
Ra/Rc/Re	100K +/- 5%

Board ID	Rb / Rd / Rf	V_{AD_BID} min	V_{AD_BID} typ	V_{AD_BID} max
0	0	0 V	0 V	0 V
1	8.2K +/- 5%	0.216 V	0.250 V	0.289 V
2	18K +/- 5%	0.436 V	0.503 V	0.538 V
3	33K +/- 5%	0.712 V	0.819 V	0.875 V
4	56K +/- 5%	1.036 V	1.185 V	1.264 V
5	100K +/- 5%	1.453 V	1.650 V	1.759 V
6	200K +/- 5%	1.935 V	2.200 V	2.341 V
7	NC	2.500 V	3.300 V	3.300 V

BOARD ID Table

Board ID	PCB Revision
0	0.1
1	0.2
2	0.3
3	1.0
4	
5	
6	
7	

BTO Option Table

BTO Item	BOM Structure
UMA ONLY	UMA ONLY@
Discrete	DIS@
Discrete Only	DIS ONLY@
VRAM	X76@
Switchable	SG@
UMA ONLY & OPTIMUS	UMOP@
3G	3G@
Blue Tooth	BT@
OPTIMUS	OPT@
NonSG SKU	NonSG@
NEW71	71@
NEW91	91@
N11P-GV2H	GV2H@
N11P-GE1	GE1@
N11P-GV2H-A2	GV2HA2@
N11P-GV2H-A3	GV2HA3@
Non OPT SKU	NonOPT@
SG or OPT	SGOPT@

USB Port Table

USB 2.0	USB 1.1	Port	3 External USB Port
EHCI1	UHCI0	0	USB/B (Right Side)
		1	USB Port (Left Side)
	UHCI1	2	USB/B (Right Side)
		3	
	UHCI2	4	
		5	
	UHCI3	6	
		7	
EHCI2	UHCI4	8	Camera
		9	Card Reader
	UHCI5	10	SIM Card
		11	Blue Tooth
	UHCI6	12	Mini Card(WLAN)
		13	Mini Card(GPS)

VRAM P/N :
Samsung : SA000035720 (S IC D3 64MX16 K4W1G1646E-HC12 FBGA ABO!)
Hynix : SA000032420 (S IC D3 64MX16 H5TQ1G63BFR-12C FBGA ABO!)

BOM Config move to page 56

VRAM BOM Config
X7621@: X76198BOL21 ALT. GROUP PARTS 1G SAM
X7622@ X76198BOL22 ALT. GROUP PARTS 1G HYN

THIS SHEET OF ENGINEERING DRAWING IS THE PROPRIETARY PROPERTY OF COMPAL ELECTRONICS, INC. AND CONTAINS CONFIDENTIAL AND TRADE SECRET INFORMATION. THIS SHEET MAY NOT BE TRANSFERED FROM THE CUSTODY OF THE COMPETENT DIVISION OF R&D DEPARTMENT EXCEPT AS AUTHORIZED BY COMPAL ELECTRONICS, INC. NEITHER THIS SHEET NOR THE INFORMATION IT CONTAINS MAY BE USED BY OR DISCLOSED TO ANY THIRD PARTY WITHOUT PRIOR WRITTEN CONSENT OF COMPAL ELECTRONICS, INC.

Security Classification	Compal Secret Data		Compal Electronics, Inc.
Issued Date	2009/08/01	Deciphered Date	2010/08/01
Title	SCHEMATICS,MB A5893		
Size B	Document Number 401869		Rev C
Date: Wednesday, June 30, 2010	Sheet 3 of 56		

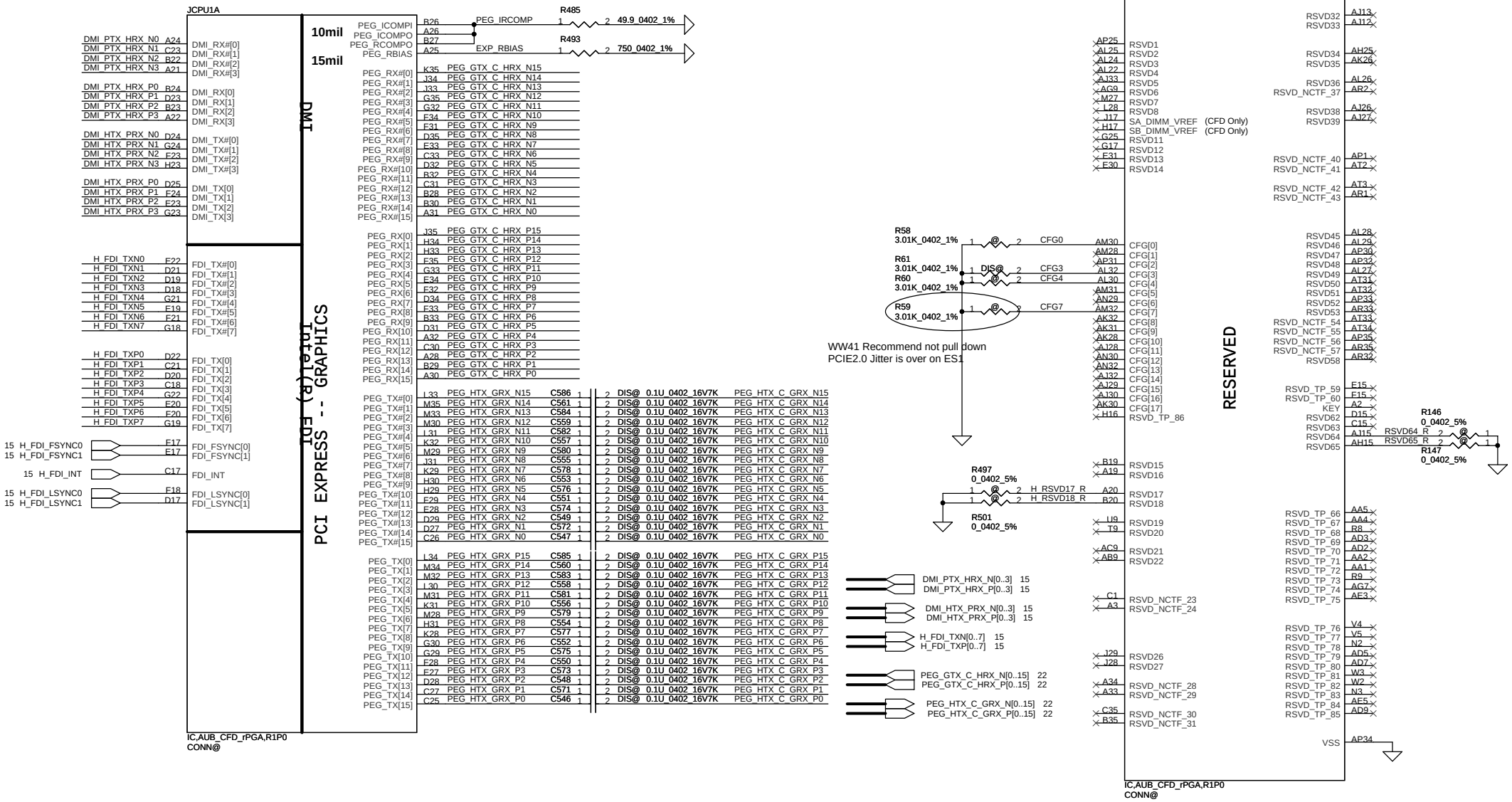

eDP Signals Mapping

eDP Singal	PEG Singals	Lane Reversal
eDP_TX0	PEG_HTX_C_GRX_P15	PEG_HTX_C_GRX_P0
eDP_TX#0	PEG_HTX_C_GRX_N15	PEG_HTX_C_GRX_N0
eDP_TX1	PEG_HTX_C_GRX_P14	PEG_HTX_C_GRX_P1
eDP_TX#1	PEG_HTX_C_GRX_N14	PEG_HTX_C_GRX_N1
eDP_TX2	PEG_HTX_C_GRX_P13	PEG_HTX_C_GRX_P2
eDP_TX#2	PEG_HTX_C_GRX_N13	PEG_HTX_C_GRX_N2
eDP_TX3	PEG_HTX_C_GRX_P12	PEG_HTX_C_GRX_P3
eDP_TX#3	PEG_HTX_C_GRX_N12	PEG_HTX_C_GRX_N3
eDP_AUX	PEG_GTX_C_HRX_P13	PEG_GTX_C_HRX_P2
eDP_AUX#	PEG_GTX_C_HRX_N13	PEG_GTX_C_HRX_N2
eDP_HPD	PEG_GTX_C_HRX_P12	PEG_GTX_C_HRX_P3

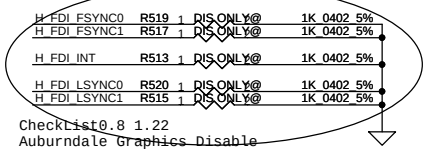

CFG0 - PCI-Express Configuration Select

*1:Single PEG
0:Bifurcation enabled

CFG3 - PCI-Express Static Lane Reversal

*1 :Normal Operation
0 :Lane Numbers Reversed
15 -> 0, 14 -> 1, ...

CFG4 - Display Port Presence

*1:Disabled; No Physical Display Port attached to Embedded Display Port
0:Enabled; An external Display Port device is connected to the Embedded Display Port

*:Default

Security Classification	Compal Secret Data		
Issued Date	2009/08/01	Deciphered Date	2010/08/01

THIS SHEET OF ENGINEERING DRAWING IS THE PROPRIETARY PROPERTY OF COMPAL ELECTRONICS, INC. AND CONTAINS CONFIDENTIAL AND TRADE SECRET INFORMATION. THIS SHEET MAY NOT BE TRANSFERED FROM THE CUSTODY OF THE COMPETENT DIVISION OF R&D DEPARTMENT EXCEPT AS AUTHORIZED BY COMPAL ELECTRONICS, INC. NEITHER THIS SHEET NOR THE INFORMATION IT CONTAINS MAY BE USED BY OR DISCLOSED TO ANY THIRD PARTY WITHOUT PRIOR WRITTEN CONSENT OF COMPAL ELECTRONICS, INC.

Compal Electronics, Inc.

Title: SCHEMATICS,MB A5893

Size: B | Document Number: 401869 | Rev: C

Date: Wednesday, June 30, 2010 | Sheet 4 of 56

www.AliSaler.Com

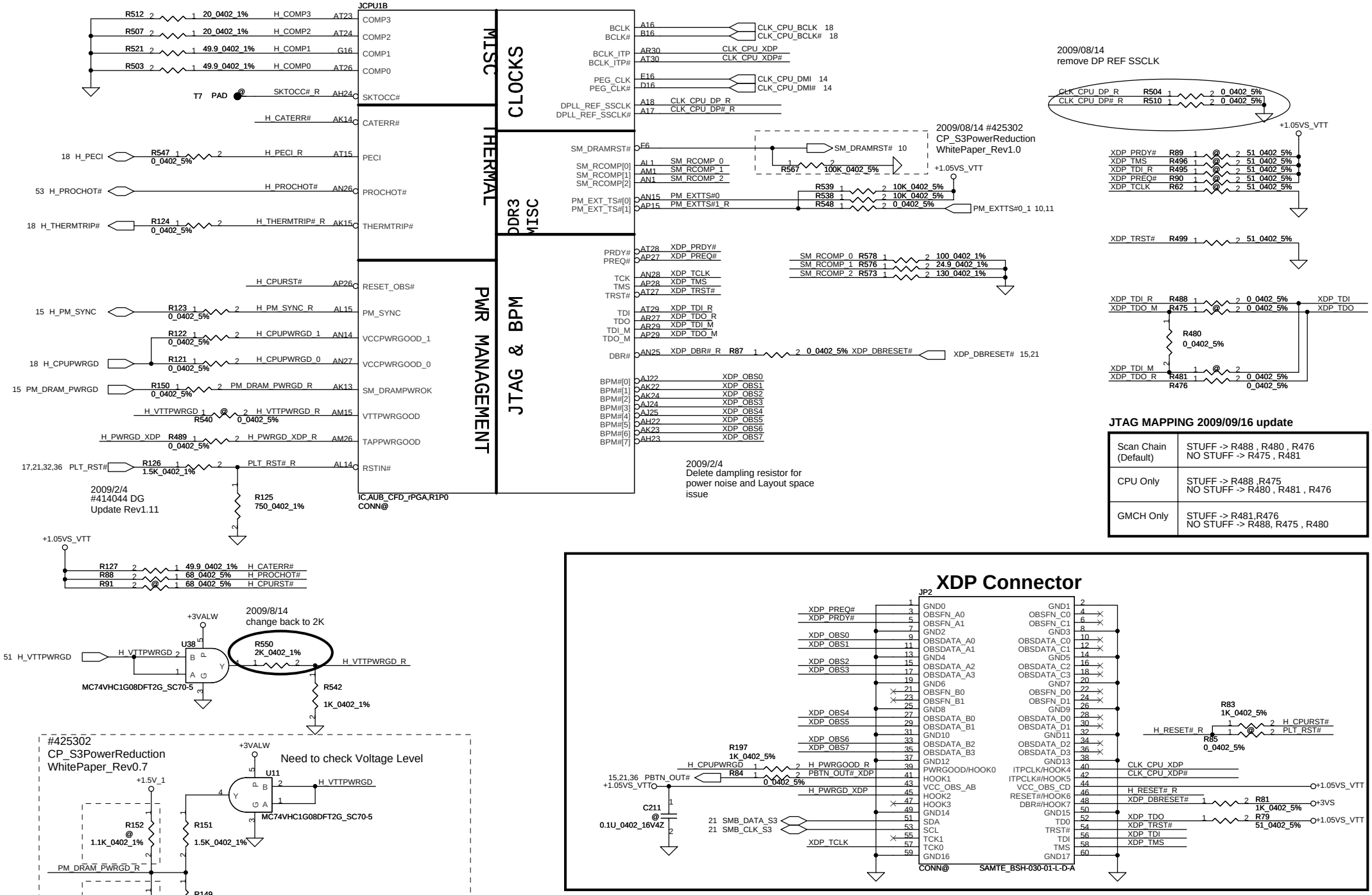

JTAG MAPPING 2009/09/16 update

Scan Chain (Default)	STUFF -> R488 , R480 , R476 NO STUFF -> R475 , R481
CPU Only	STUFF -> R488 ,R475 NO STUFF -> R480 , R481 , R476
GMCH Only	STUFF -> R481,R476 NO STUFF -> R488, R475 , R480

Security Classification	Compal Secret Data		
Issued Date	2009/08/01	Deciphered Date	2010/08/01

THIS SHEET OF ENGINEERING DRAWING IS THE PROPRIETARY PROPERTY OF COMPAL ELECTRONICS, INC. AND CONTAINS CONFIDENTIAL AND TRADE SECRET INFORMATION. THIS SHEET MAY NOT BE TRANSFERED FROM THE CUSTODY OF THE COMPETENT DIVISION OF R&D DEPARTMENT EXCEPT AS AUTHORIZED BY COMPAL ELECTRONICS, INC. NEITHER THIS SHEET NOR THE INFORMATION IT CONTAINS MAY BE USED BY OR DISCLOSED TO ANY THIRD PARTY WITHOUT PRIOR WRITTEN CONSENT OF COMPAL ELECTRONICS, INC.

Compal Electronics, Inc.

Title: SCHEMATICS,MB A5893

Size: B | Document Number: 401869 | Rev: C

Date: Wednesday, June 30, 2010 | Sheet 5 of 56

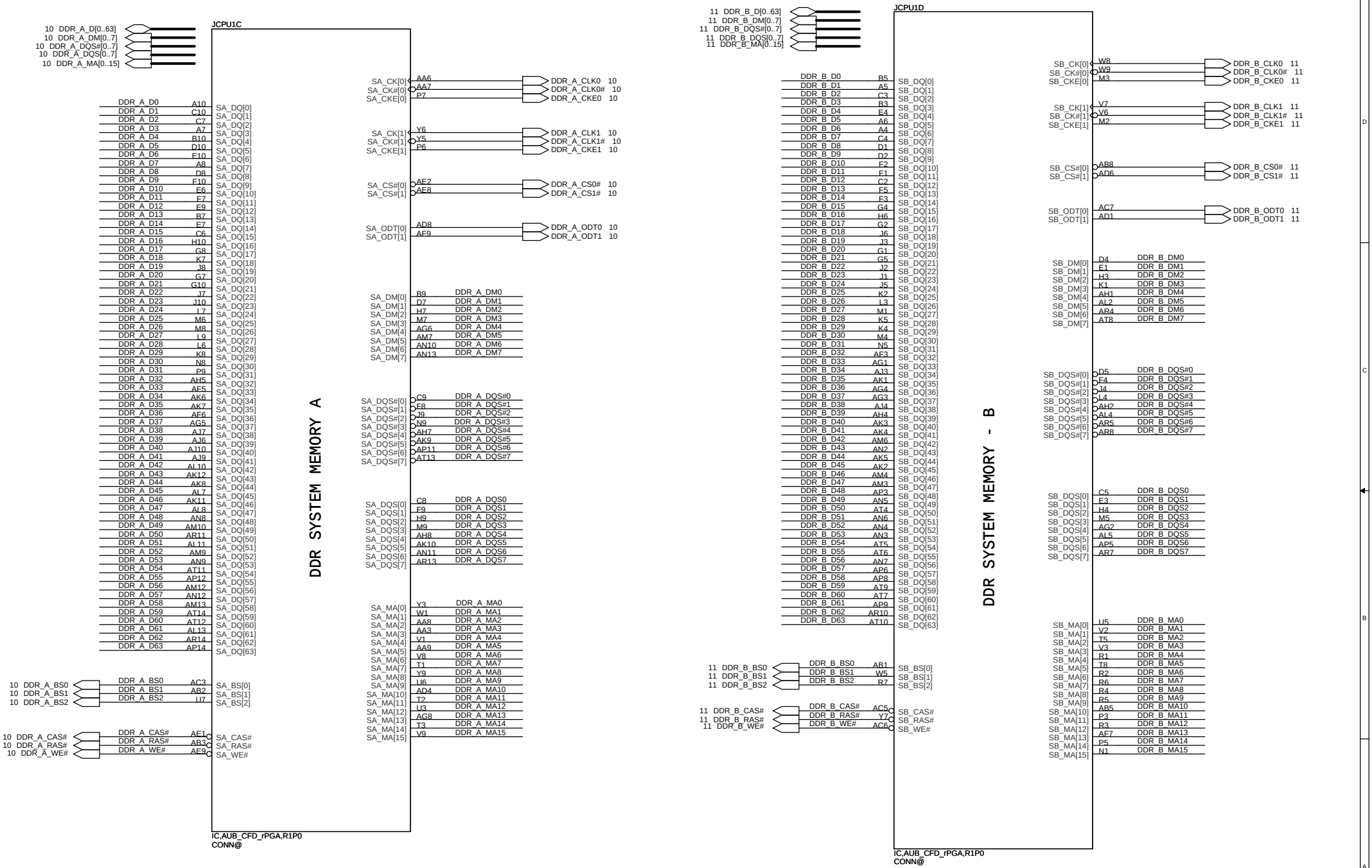

Security Classification	Compal Secret Data		
Issued Date	2009/08/01	Deciphered Date	2010/08/01

THIS SHEET OF ENGINEERING DRAWING IS THE PROPRIETARY PROPERTY OF COMPAL ELECTRONICS, INC. AND CONTAINS CONFIDENTIAL AND TRADE SECRET INFORMATION. THIS SHEET MAY NOT BE TRANSFERED FROM THE CUSTODY OF THE COMPETENT DIVISION OF R&D DEPARTMENT EXCEPT AS AUTHORIZED BY COMPAL ELECTRONICS, INC. NEITHER THIS SHEET NOR THE INFORMATION IT CONTAINS MAY BE USED BY OR DISCLOSED TO ANY THIRD PARTY WITHOUT PRIOR WRITTEN CONSENT OF COMPAL ELECTRONICS, INC.

Compal Electronics, Inc.

Title: SCHEMATICS,MB A5893

Size: B | Document Number: 401869 | Rev: C

Date: Wednesday, June 30, 2010 | Sheet 6 of 56

WWW.AliSaler.Com

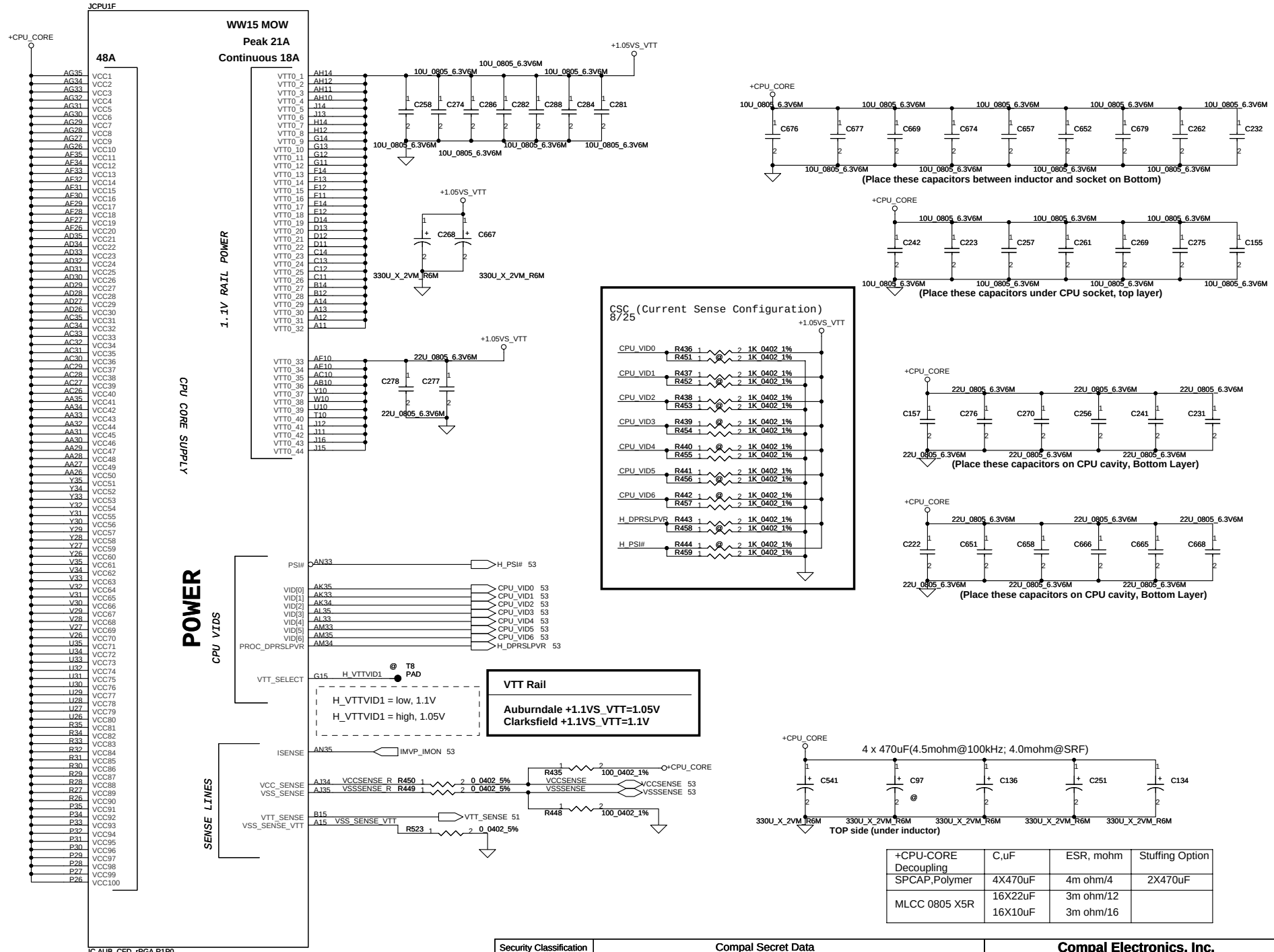

VTT Rail

Auburndale +1.1VS_VTT=1.05V
Clarksfield +1.1VS_VTT=1.1V

CSC (Current Sense Configuration)
8/25

(Place these capacitors between inductor and socket on Bottom)

(Place these capacitors under CPU socket, top layer)

(Place these capacitors on CPU cavity, Bottom Layer)

(Place these capacitors on CPU cavity, Bottom Layer)

TOP side (under inductor)

+CPU-CORE Decoupling	C,uF	ESR, mohm	Stuffing Option
SPCAP,Polymer	4X470uF	4m ohm/4	2X470uF
MLCC 0805 X5R	16X22uF 16X10uF	3m ohm/12 3m ohm/16	

Security Classification	Compal Secret Data		
Issued Date	2009/08/01	Deciphered Date	2010/08/01

THIS SHEET OF ENGINEERING DRAWING IS THE PROPRIETARY PROPERTY OF COMPAL ELECTRONICS, INC. AND CONTAINS CONFIDENTIAL AND TRADE SECRET INFORMATION. THIS SHEET MAY NOT BE TRANSFERED FROM THE CUSTODY OF THE COMPETENT DIVISION OF R&D DEPARTMENT EXCEPT AS AUTHORIZED BY COMPAL ELECTRONICS, INC. NEITHER THIS SHEET NOR THE INFORMATION IT CONTAINS MAY BE USED BY OR DISCLOSED TO ANY THIRD PARTY WITHOUT PRIOR WRITTEN CONSENT OF COMPAL ELECTRONICS, INC.

Compal Electronics, Inc.

Title: SCHEMATICS,MB A5893

Size: Custom | Document Number: 401869 | Rev: C

Date: Wednesday, June 30, 2010 | Sheet 7 of 56

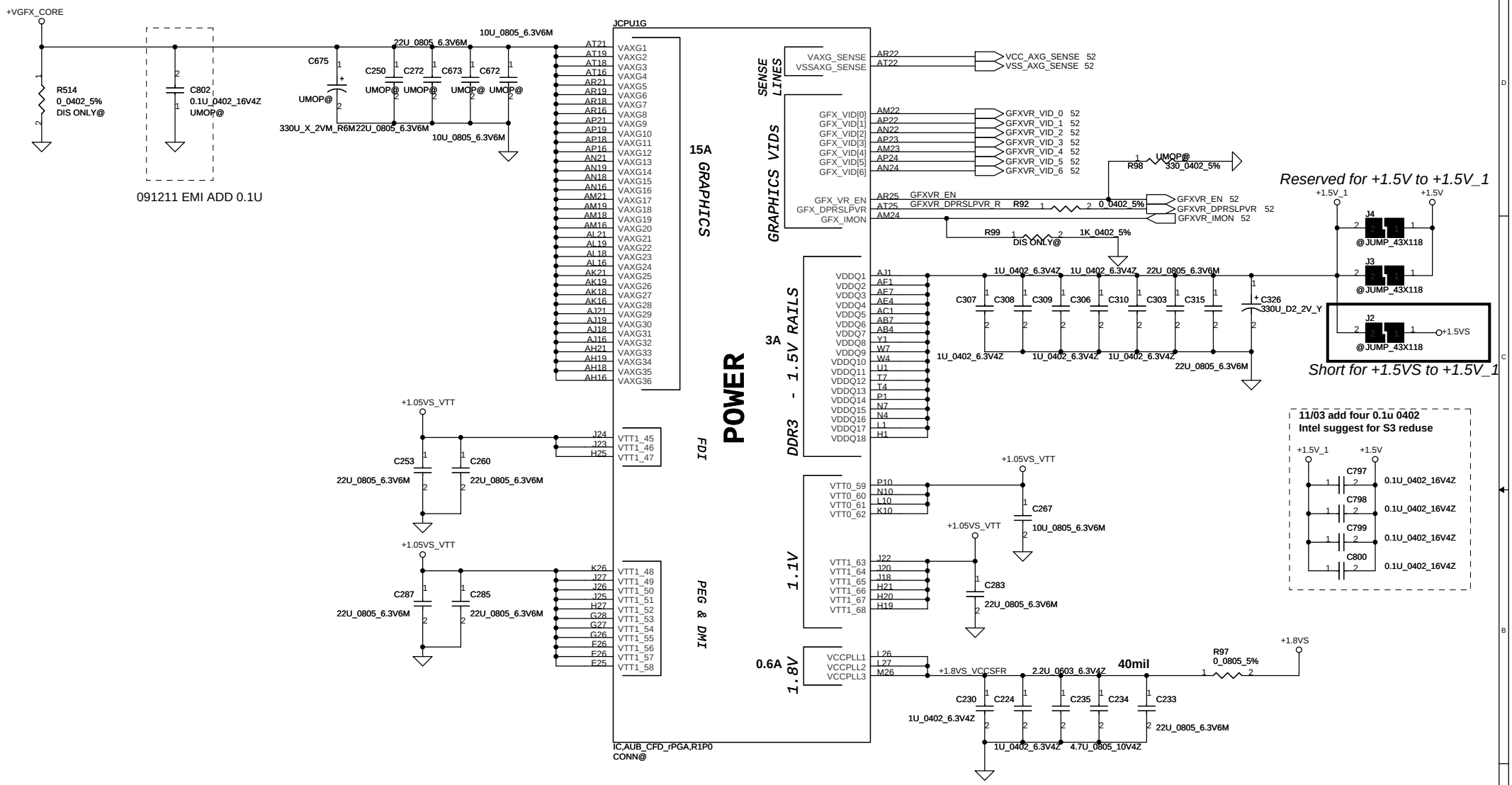

Security Classification	Compal Secret Data		
Issued Date	2009/08/01	Deciphered Date	2010/08/01

THIS SHEET OF ENGINEERING DRAWING IS THE PROPRIETARY PROPERTY OF COMPAL ELECTRONICS, INC. AND CONTAINS CONFIDENTIAL AND TRADE SECRET INFORMATION. THIS SHEET MAY NOT BE TRANSFERED FROM THE CUSTODY OF THE COMPETENT DIVISION OF R&D DEPARTMENT EXCEPT AS AUTHORIZED BY COMPAL ELECTRONICS, INC. NEITHER THIS SHEET NOR THE INFORMATION IT CONTAINS MAY BE USED BY OR DISCLOSED TO ANY THIRD PARTY WITHOUT PRIOR WRITTEN CONSENT OF COMPAL ELECTRONICS, INC.

Compal Electronics, Inc.

Title: SCHEMATICS,MB A5893

Size: Custom | Document Number: 401869 | Rev: C

Date: Wednesday, June 30, 2010 | Sheet 8 of 56

WWW.AliSaler.Com

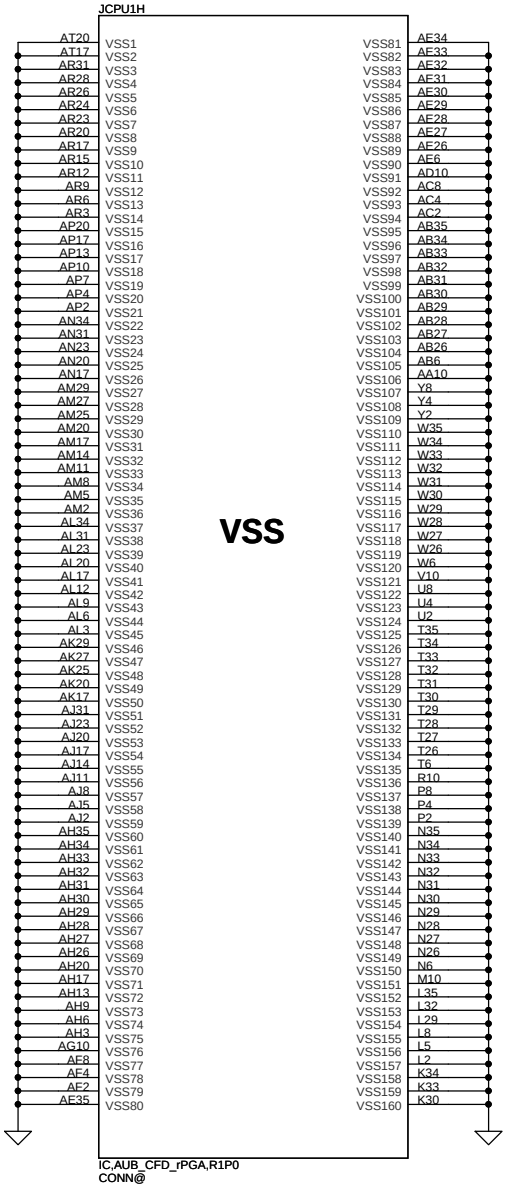

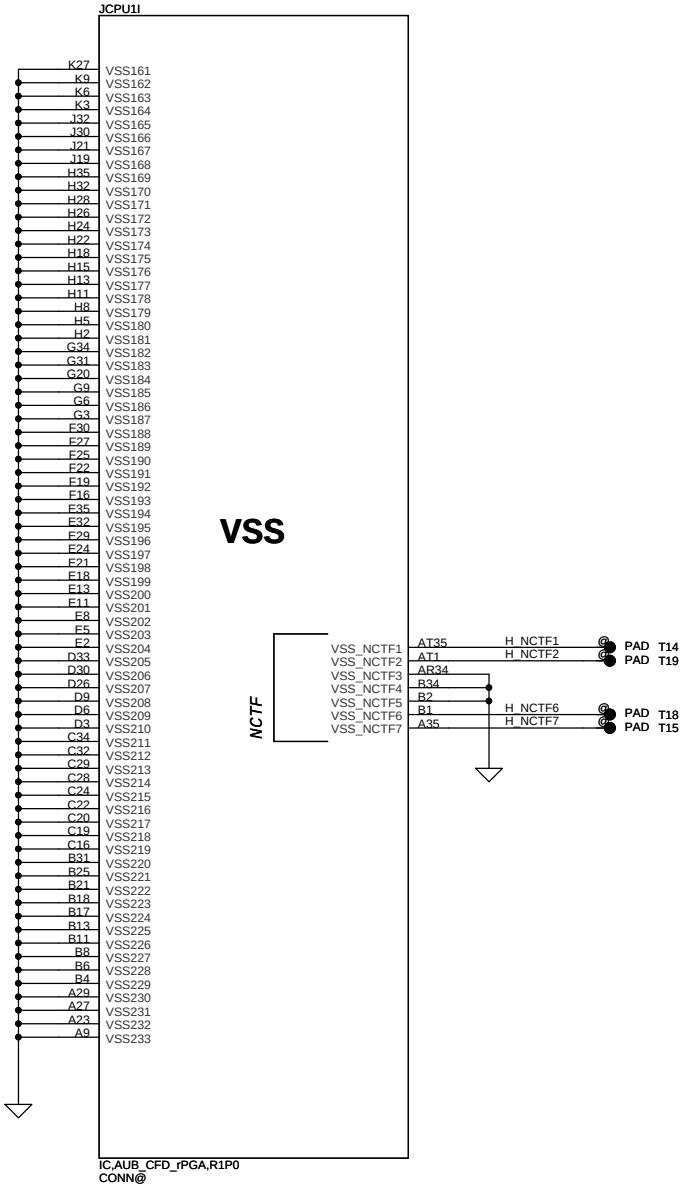

Security Classification	Compal Secret Data		
Issued Date	2009/08/01	Deciphered Date	2010/08/01

THIS SHEET OF ENGINEERING DRAWING IS THE PROPRIETARY PROPERTY OF COMPAL ELECTRONICS, INC. AND CONTAINS CONFIDENTIAL AND TRADE SECRET INFORMATION. THIS SHEET MAY NOT BE TRANSFERED FROM THE CUSTODY OF THE COMPETENT DIVISION OF R&D DEPARTMENT EXCEPT AS AUTHORIZED BY COMPAL ELECTRONICS, INC. NEITHER THIS SHEET NOR THE INFORMATION IT CONTAINS MAY BE USED BY OR DISCLOSED TO ANY THIRD PARTY WITHOUT PRIOR WRITTEN CONSENT OF COMPAL ELECTRONICS, INC.

Compal Electronics, Inc.

Title: SCHEMATICS,MB A5893

Size: Custom | Document Number: 401869 | Rev: C

Date: Wednesday, June 30, 2010 | Sheet 9 of 56

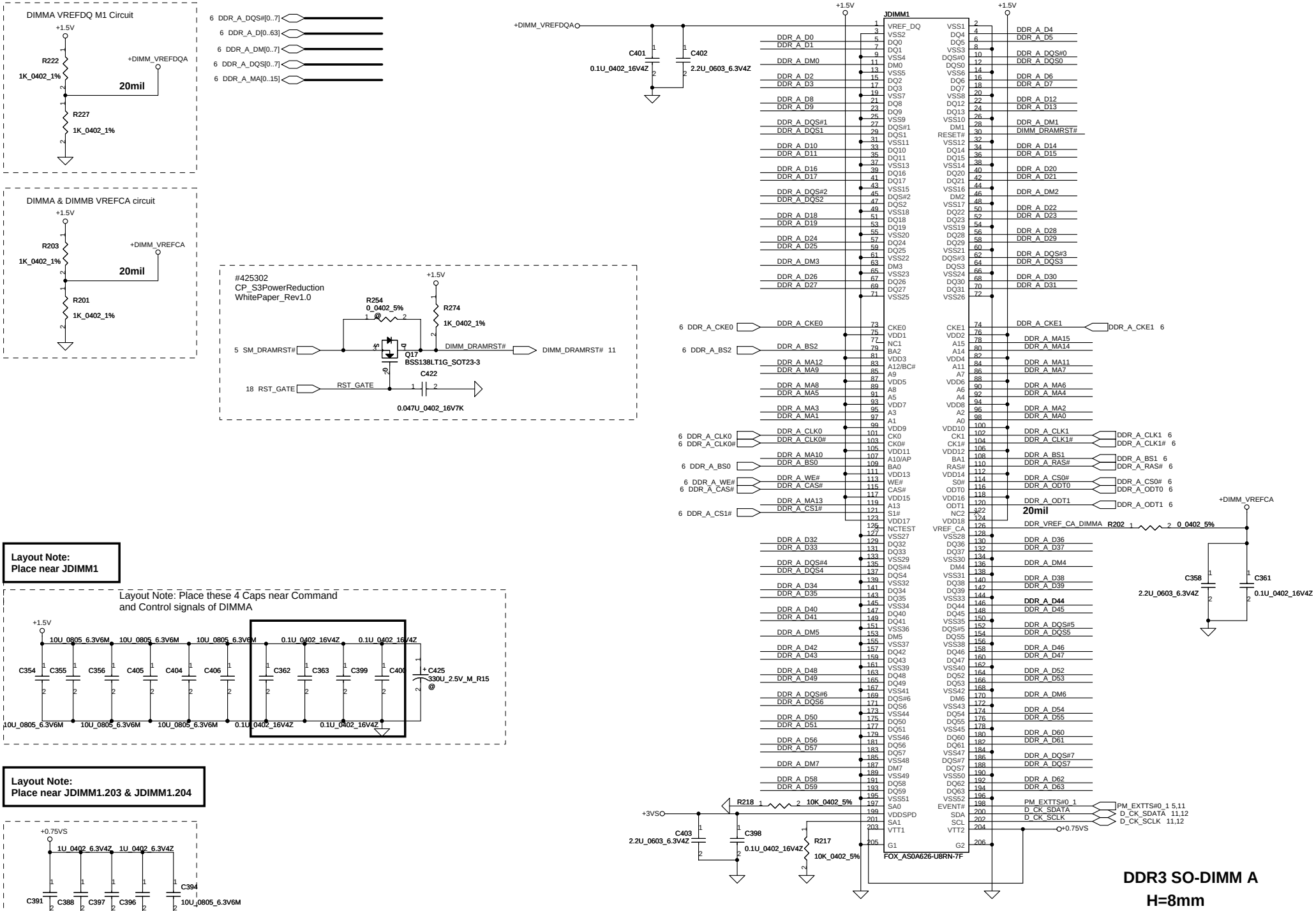

Security Classification	Compal Secret Data		
Issued Date	2009/08/01	Deciphered Date	2010/08/01

THIS SHEET OF ENGINEERING DRAWING IS THE PROPRIETARY PROPERTY OF COMPAL ELECTRONICS, INC. AND CONTAINS CONFIDENTIAL AND TRADE SECRET INFORMATION. THIS SHEET MAY NOT BE TRANSFERRED FROM THE CUSTODY OF THE COMPETENT DIVISION OF R&D DEPARTMENT EXCEPT AS AUTHORIZED BY COMPAL ELECTRONICS, INC. NEITHER THIS SHEET NOR THE INFORMATION IT CONTAINS MAY BE USED BY OR DISCLOSED TO ANY THIRD PARTY WITHOUT PRIOR WRITTEN CONSENT OF COMPAL ELECTRONICS, INC.

Compal Electronics, Inc.

Title: SCHEMATICS,MB A5893

Size: Custom | Document Number: 401869 | Rev: C

Date: Wednesday, June 30, 2010 | Sheet 10 of 56

WWW.AliSaler.Com

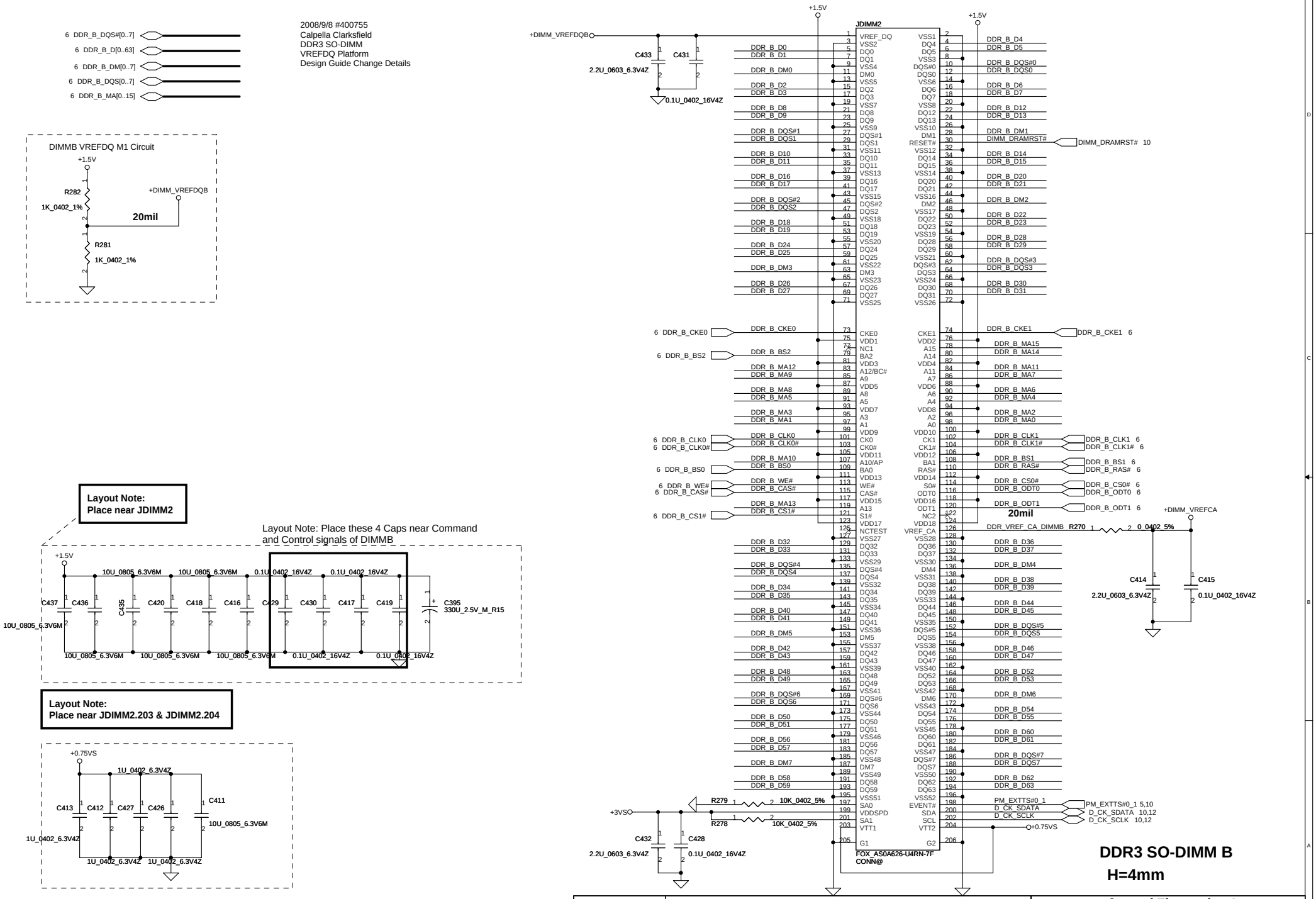

Security Classification	Compal Secret Data			Compal Electronics, Inc.
Issued Date	2009/08/01	Deciphered Date	2010/08/01	Title: SCHEMATICS,MB A5893
THIS SHEET OF ENGINEERING DRAWING IS THE PROPRIETARY PROPERTY OF COMPAL ELECTRONICS, INC. AND CONTAINS CONFIDENTIAL AND TRADE SECRET INFORMATION. THIS SHEET MAY NOT BE TRANSFERRED FROM THE CUSTODY OF THE COMPETENT DIVISION OF R&D DEPARTMENT EXCEPT AS AUTHORIZED BY COMPAL ELECTRONICS, INC. NEITHER THIS SHEET NOR THE INFORMATION IT CONTAINS MAY BE USED BY OR DISCLOSED TO ANY THIRD PARTY WITHOUT PRIOR WRITTEN CONSENT OF COMPAL ELECTRONICS, INC.				Size: Custom / Document Number: 401869 / Rev: C
				Date: Wednesday, June 30, 2010 / Sheet 11 of 56

SM010014520 3000ma 220ohm@100mhz DCR 0.04

+1.05VS_VTT — L76 FBMA-L11-201209-221LMA30T_0805 — +CLK_1.05VS (40mil)
C782 10U_0805_10V4Z; C774 10U_0805_10V4Z; C757 0.1U_0402_16V4Z; C770 0.1U_0402_16V4Z

SM010014520 3000ma 220ohm@100mhz DCR 0.04

+3VS — L69 FBMA-L11-201209-221LMA30T_0805 — +CLK_3VS (40mil)
C737 10U_0805_10V4Z; C740 10U_0805_10V4Z; C750 0.1U_0402_16V4Z; C741 0.1U_0402_16V4Z

SM010014520 3000ma 220ohm@100mhz DCR 0.04

+1.5VS — L74 FBMA-L11-201209-221LMA30T_0805 @ — L75 FBMA-L11-201209-221LMA30T_0805 — +CLK_1.5VS (40mil)
C781 10U_0805_10V4Z; C768 10U_0805_10V4Z; C742 0.1U_0402_16V4Z; C771 0.1U_0402_16V4Z; C769 0.1U_0402_16V4Z

Clock Generator

U47 — IDT SA00003HR00 — SLG8SP587VTR_QFN32_5X5

+CLK_3VS; +CLK_1.5VS

Pin	Signal	Net
1	VDD_USB_48	
2	VSS_48M	
3	DOT_96	CLK_BUF_DREF_96M
4	DOT_96#	CLK_BUF_DREF_96M#
5	VDD_27	
6	27MHZ	27M_CLK_R
7	27MHZ_SS	27M_SSC_R
8	USB_48	
9	VSS_27M	
10	SATA	CLK_BUF_PCIE_SATA
11	SATA#	CLK_BUF_PCIE_SATA#
12	VSS_SRC	
13	SRC_1	CLK_BUF_CPU_DMI
14	SRC_1#	CLK_BUF_CPU_DMI#
15	VDD_SRC_IO	+CLK_1.05VS
16	CPU_STOP#	H_STP_CPU#
33	TGND	
32	SCL	D_CK_SCLK
31	SDA	D_CK_SDATA
30	REF_0/CPU_SEL	REF_0/CPU_SEL R682 33_0402_5%
29	VDD_REF	
28	XTAL_IN	CLK_XTAL_IN
27	XTAL_OUT	CLK_XTAL_OUT
26	VSS_REF	
25	CKPWRGD/PD#	CK505_PWRGD
24	VDD_CPU	
23	CPU_0	CLK_BUF_CPU_BCLK
22	CPU_0#	CLK_BUF_CPU_BCLK#
21	VSS_CPU	
20	CPU_1	
19	CPU_1#	
18	VDD_CPU_IO	+CLK_1.05VS
17	VDD_SRC	+CLK_1.5VS

14 CLK_BUF_DREF_96M; 14 CLK_BUF_DREF_96M#; R717 0_0402_5% @
22 27M_CLK; 22 27M_SSC; R716 0_0402_5% @
14 CLK_BUF_PCIE_SATA; 14 CLK_BUF_PCIE_SATA#
14 CLK_BUF_CPU_DMI; 14 CLK_BUF_CPU_DMI#
D_CK_SCLK 10,11; D_CK_SDATA 10,11; CLK_BUF_ICH_14M 14
CLK_BUF_CPU_BCLK 14; CLK_BUF_CPU_BCLK# 14

IDT: 9LRS3199AKLFT, SA000030P00

SILEGO: SLG8SP587V(WF), SA00002XY10

Low Power:

IDT: 9LVS3199AKLFT, SA00003HR00

Realtek: RTM890N-631-VB-GRT, SA00003HQ10

IDT 9LVS3199AKLFT NC

+3VS — Silego Have Internal Pull-Up — R690 10K_0402_5% H_STP_CPU#

IDT Have Internal Pull-Down

FOR Realtek

R683 10K_0402_5% REF_0/CPU_SEL

PIN 30	CPU_0	CPU_1
0 (Default)	133MHz	133MHz
1	100MHz	100MHz

+3VS — R678 4.7K_0402_5% — +3VS
14,21,34 PCH_SMBDATA — Q46 2N7002E-T1-GE3_SOT23-3 — D_CK_SDATA

+3VS — R677 4.7K_0402_5% — +3VS
14,21,34 PCH_SMBCLK — Q45 2N7002E-T1-GE3_SOT23-3 — D_CK_SCLK

+3VS — R693 10K_0402_5%
CK505_PWRGD — R691 0_0402_5% @ — VGATE 15,53
Q48 2N7002E-T1-GE3_SOT23-3 — CLK_ENABLE# 53

CLK_XTAL_IN — C755 27P_0402_50V8J
Y4 14.31818MHZ 20PF 7A14300003
CLK_XTAL_OUT — C762 27P_0402_50V8J

Change to 5x3.2

Security Classification	Compal Secret Data		
Issued Date	2009/08/01	Deciphered Date	2010/08/01

THIS SHEET OF ENGINEERING DRAWING IS THE PROPRIETARY PROPERTY OF COMPAL ELECTRONICS, INC. AND CONTAINS CONFIDENTIAL AND TRADE SECRET INFORMATION. THIS SHEET MAY NOT BE TRANSFERED FROM THE CUSTODY OF THE COMPETENT DIVISION OF R&D DEPARTMENT EXCEPT AS AUTHORIZED BY COMPAL ELECTRONICS, INC. NEITHER THIS SHEET NOR THE INFORMATION IT CONTAINS MAY BE USED BY OR DISCLOSED TO ANY THIRD PARTY WITHOUT PRIOR WRITTEN CONSENT OF COMPAL ELECTRONICS, INC.

Compal Electronics, Inc.

Title: SCHEMATICS,MB A5893

Size: Custom | Document Number: 401869 | Rev: C

Date: Wednesday, June 30, 2010 | Sheet 12 of 56

WWW.AliSaler.Com

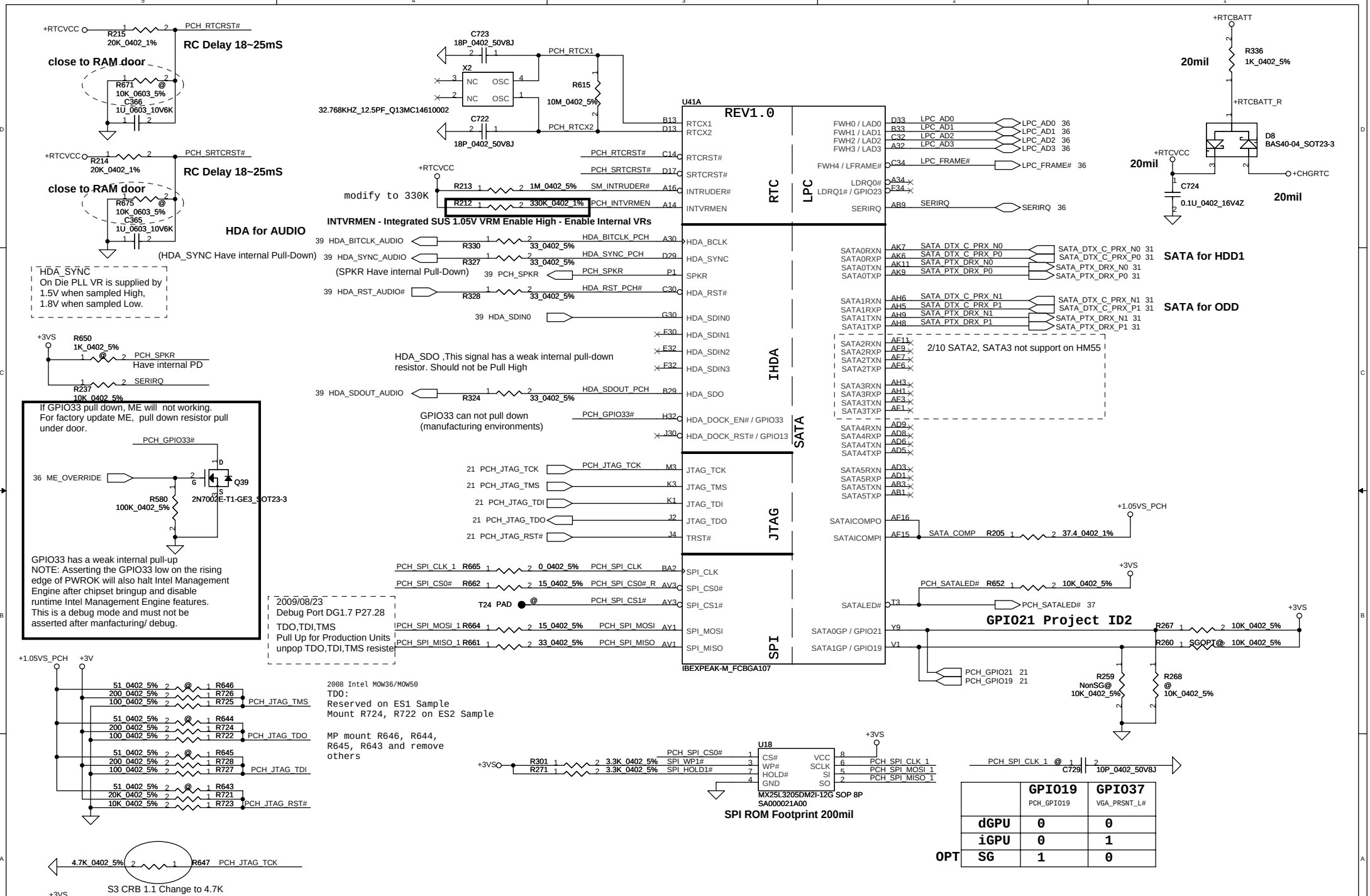

	GPIO19 PCH_GPIO19	GPIO37 VGA_PRSNT_L#
dGPU	0	0
iGPU	0	1
OPT SG	1	0

Security Classification	Compal Secret Data		
Issued Date	2009/08/01	Deciphered Date	2010/08/01

THIS SHEET OF ENGINEERING DRAWING IS THE PROPRIETARY PROPERTY OF COMPAL ELECTRONICS, INC. AND CONTAINS CONFIDENTIAL AND TRADE SECRET INFORMATION. THIS SHEET MAY NOT BE TRANSFERED FROM THE CUSTODY OF THE COMPETENT DIVISION OF R&D DEPARTMENT EXCEPT AS AUTHORIZED BY COMPAL ELECTRONICS, INC. NEITHER THIS SHEET NOR THE INFORMATION IT CONTAINS MAY BE USED BY OR DISCLOSED TO ANY THIRD PARTY WITHOUT PRIOR WRITTEN CONSENT OF COMPAL ELECTRONICS, INC.

Compal Electronics, Inc.

Title: SCHEMATICS,MB A5893

Size: Custom | Document Number: 401869 | Rev: C

Date: Wednesday, June 30, 2010 | Sheet 13 of 56

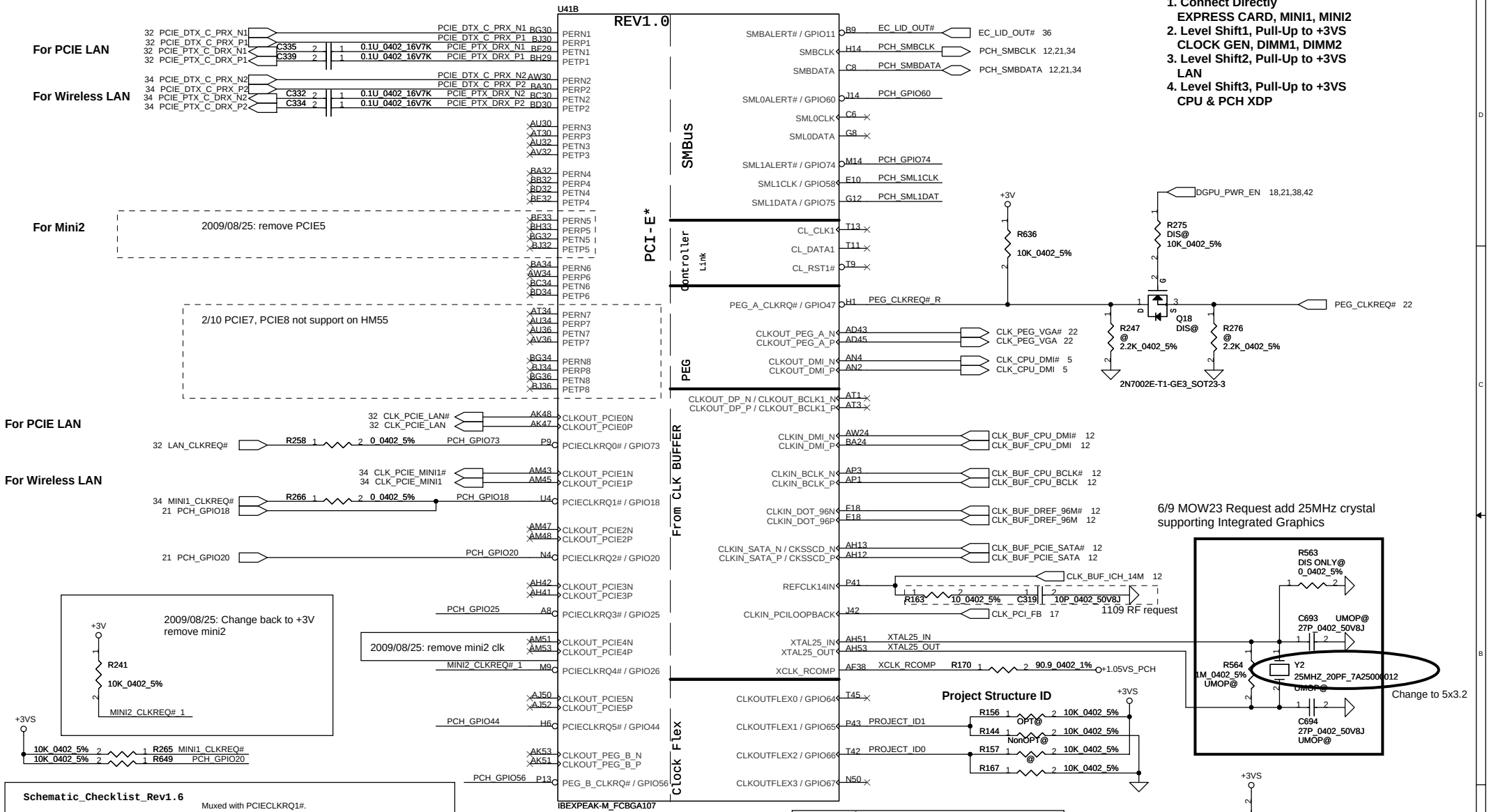

Schematic_Checklist_Rev1.6

GPIO18	Main (core) power well (+V3.3S)	Muxed with PCIECLKRQ1#. If not used, requires 8.2-k to 10-k pull-up to +Vcc_3.3 (+V3.3S)
GPIO25	Resume (Sus) well (+V3.3A)	Muxed with PCIECLKREQ3# If not used, requires 8.2-k to 10-k pull-up to +V3.3A rail.

Project Structure

	GPIO21 ID2	GPIO65 ID1	GPIO66 ID0	Structure
	0	0	0	NEW70
	0	0	1	NEW80
	0	1	0	NEW90
*Discrete	1	0	0	NEW71/91
*Optimus	1	1	0	NEW71/91

Security Classification	Compal Secret Data		
Issued Date	2009/08/01	Deciphered Date	2010/08/01

THIS SHEET OF ENGINEERING DRAWING IS THE PROPRIETARY PROPERTY OF COMPAL ELECTRONICS, INC. AND CONTAINS CONFIDENTIAL AND TRADE SECRET INFORMATION. THIS SHEET MAY NOT BE TRANSFERED FROM THE CUSTODY OF THE COMPETENT DIVISION OF R&D DEPARTMENT EXCEPT AS AUTHORIZED BY COMPAL ELECTRONICS, INC. NEITHER THIS SHEET NOR THE INFORMATION IT CONTAINS MAY BE USED BY OR DISCLOSED TO ANY THIRD PARTY WITHOUT PRIOR WRITTEN CONSENT OF COMPAL ELECTRONICS, INC.

Compal Electronics, Inc.

Title: SCHEMATICS,MB A5893

Size: Custom | Document Number: 401869 | Rev: C

Date: Wednesday, June 30, 2010 | Sheet 14 of 56

WWW.AliSaler.Com

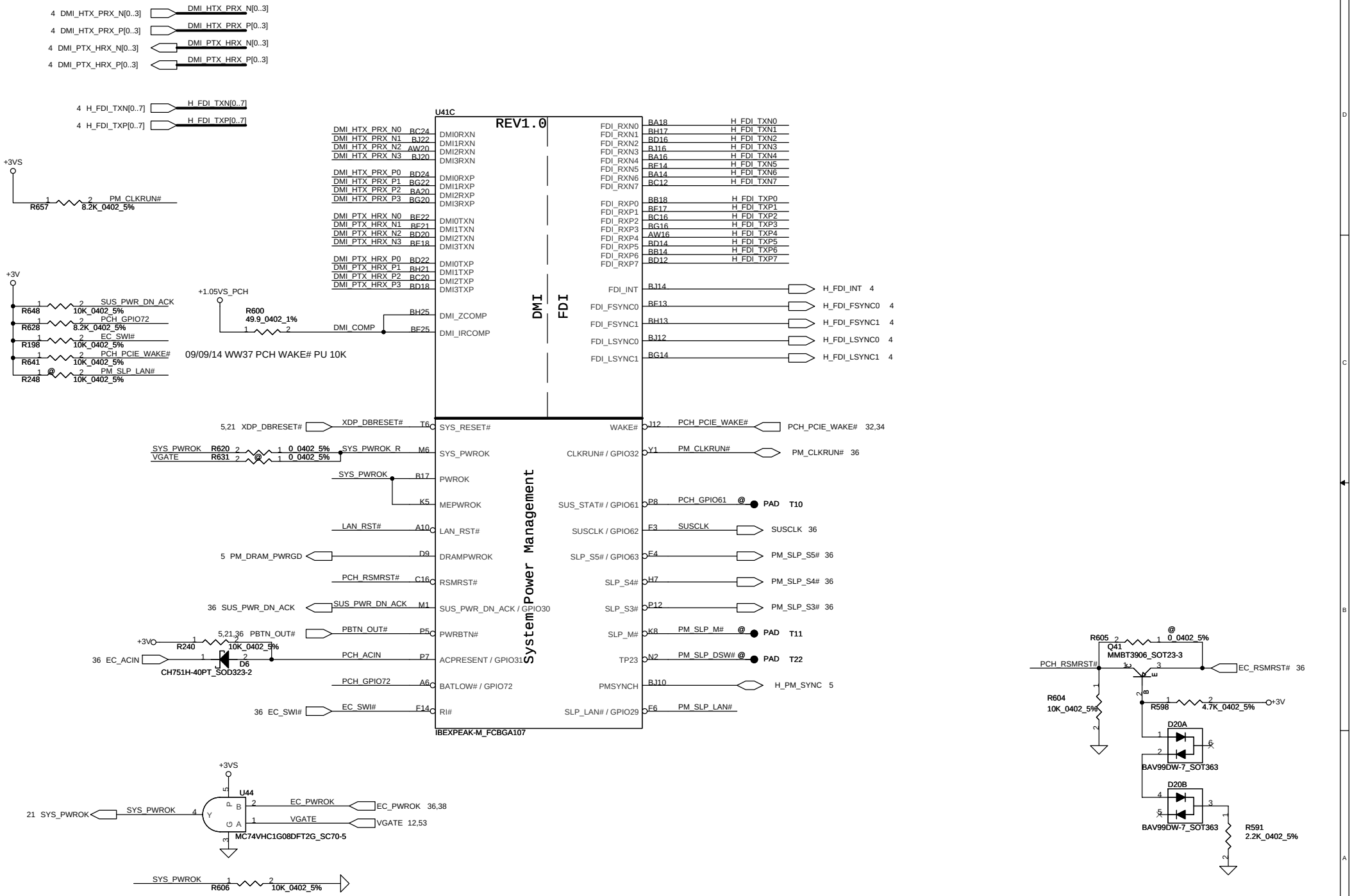

Security Classification	Compal Secret Data		
Issued Date	2009/08/01	Deciphered Date	2010/08/01

THIS SHEET OF ENGINEERING DRAWING IS THE PROPRIETARY PROPERTY OF COMPAL ELECTRONICS, INC. AND CONTAINS CONFIDENTIAL AND TRADE SECRET INFORMATION. THIS SHEET MAY NOT BE TRANSFERED FROM THE CUSTODY OF THE COMPETENT DIVISION OF R&D DEPARTMENT EXCEPT AS AUTHORIZED BY COMPAL ELECTRONICS, INC. NEITHER THIS SHEET NOR THE INFORMATION IT CONTAINS MAY BE USED BY OR DISCLOSED TO ANY THIRD PARTY WITHOUT PRIOR WRITTEN CONSENT OF COMPAL ELECTRONICS, INC.

Compal Electronics, Inc.

Title: SCHEMATICS,MB A5893

Size: Custom | Document Number: 401869 | Rev: C

Date: Wednesday, June 30, 2010 | Sheet 15 of 56

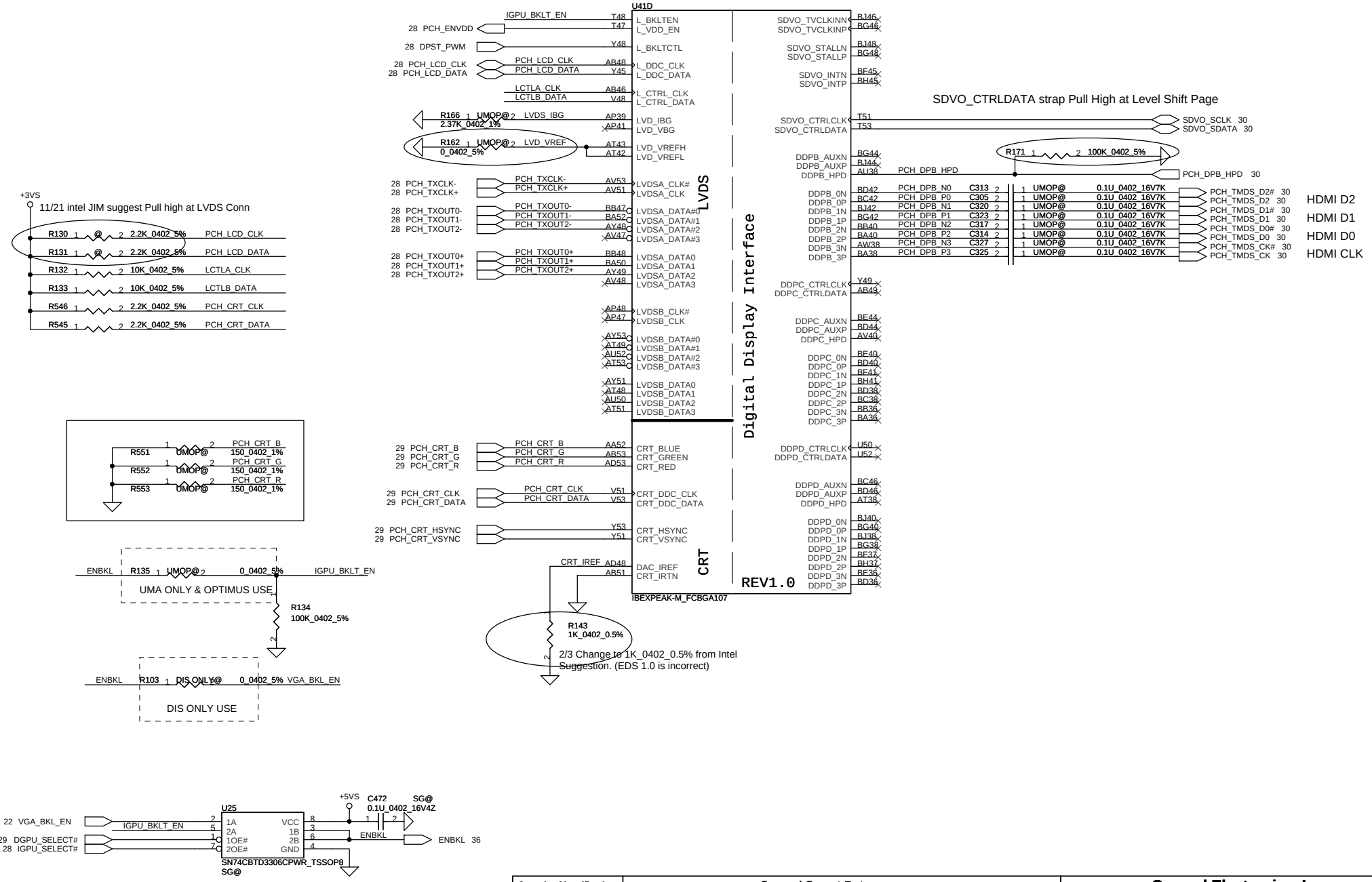

Security Classification	Compal Secret Data		
Issued Date	2009/08/01	Deciphered Date	2010/08/01

THIS SHEET OF ENGINEERING DRAWING IS THE PROPRIETARY PROPERTY OF COMPAL ELECTRONICS, INC. AND CONTAINS CONFIDENTIAL AND TRADE SECRET INFORMATION. THIS SHEET MAY NOT BE TRANSFERED FROM THE CUSTODY OF THE COMPETENT DIVISION OF R&D DEPARTMENT EXCEPT AS AUTHORIZED BY COMPAL ELECTRONICS, INC. NEITHER THIS SHEET NOR THE INFORMATION IT CONTAINS MAY BE USED BY OR DISCLOSED TO ANY THIRD PARTY WITHOUT PRIOR WRITTEN CONSENT OF COMPAL ELECTRONICS, INC.

Compal Electronics, Inc.

Title: SCHEMATICS,MB A5893

Size: Custom | Document Number: 401869 | Rev: C

Date: Wednesday, June 30, 2010 | Sheet 16 of 56

WWW.AliSaler.Com

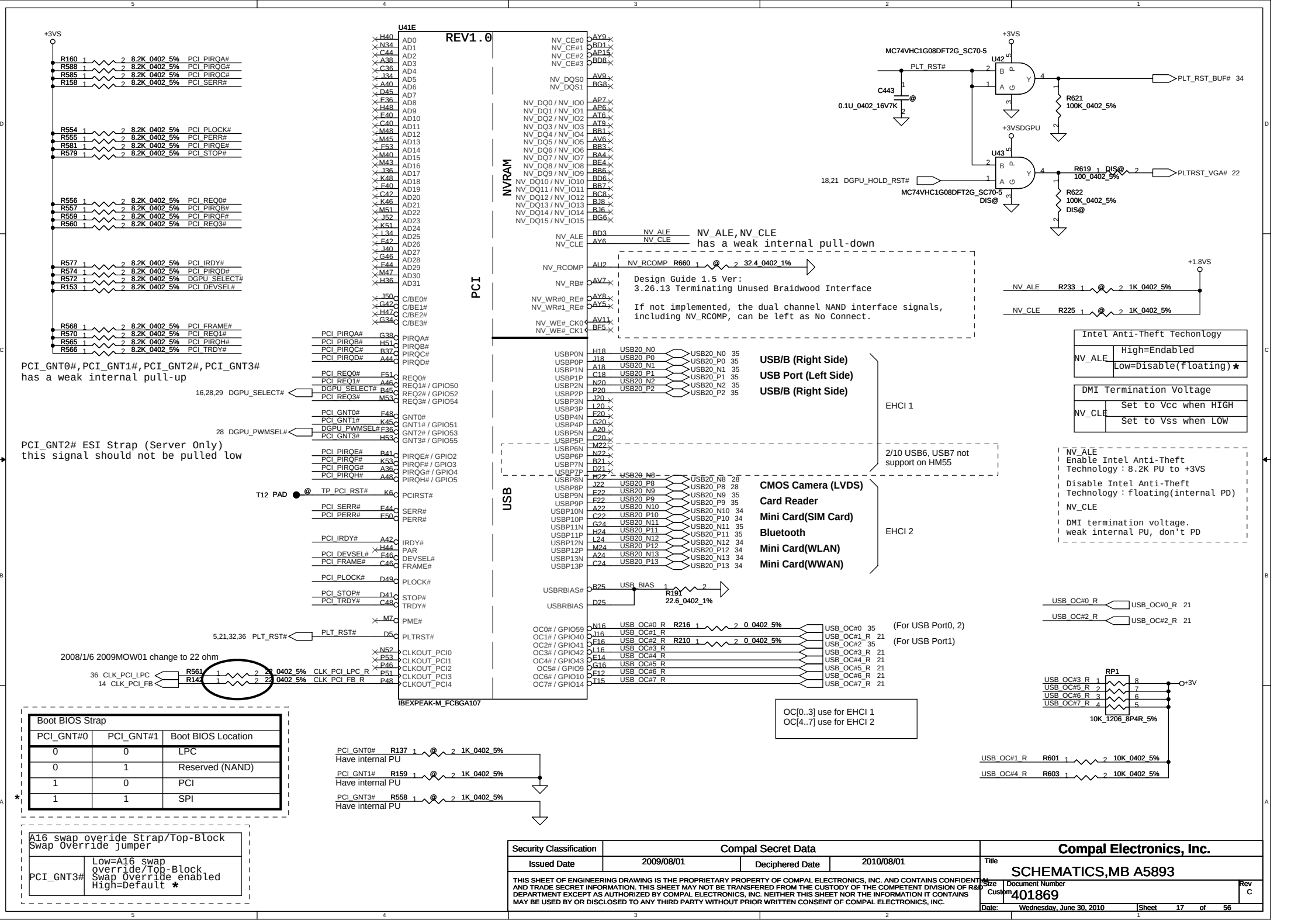

Intel Anti-Theft Techonlogy	
NV_ALE	High=Endabled
	Low=Disable(floating)*

DMI Termination Voltage	
NV_CLE	Set to Vcc when HIGH
	Set to Vss when LOW

NV_ALE
Enable Intel Anti-Theft
Technology : 8.2K PU to +3VS

Disable Intel Anti-Theft
Technology : floating(internal PD)

NV_CLE

DMI termination voltage.
weak internal PU, don't PD

Boot BIOS Strap		
PCI_GNT#0	PCI_GNT#1	Boot BIOS Location
0	0	LPC
0	1	Reserved (NAND)
1	0	PCI
1	1	SPI

*

A16 swap overide Strap/Top-Block Swap Override jumper	
PCI_GNT3#	Low=A16 swap override/Top-Block Swap Override enabled High=Default *

Security Classification	Compal Secret Data		
Issued Date	2009/08/01	Deciphered Date	2010/08/01

THIS SHEET OF ENGINEERING DRAWING IS THE PROPRIETARY PROPERTY OF COMPAL ELECTRONICS, INC. AND CONTAINS CONFIDENTIAL AND TRADE SECRET INFORMATION. THIS SHEET MAY NOT BE TRANSFERED FROM THE CUSTODY OF THE COMPETENT DIVISION OF R&D DEPARTMENT EXCEPT AS AUTHORIZED BY COMPAL ELECTRONICS, INC. NEITHER THIS SHEET NOR THE INFORMATION IT CONTAINS MAY BE USED BY OR DISCLOSED TO ANY THIRD PARTY WITHOUT PRIOR WRITTEN CONSENT OF COMPAL ELECTRONICS, INC.

Compal Electronics, Inc.

Title: SCHEMATICS,MB A5893

Size: Custom | Document Number: 401869 | Rev: C

Date: Wednesday, June 30, 2010 | Sheet 17 of 56

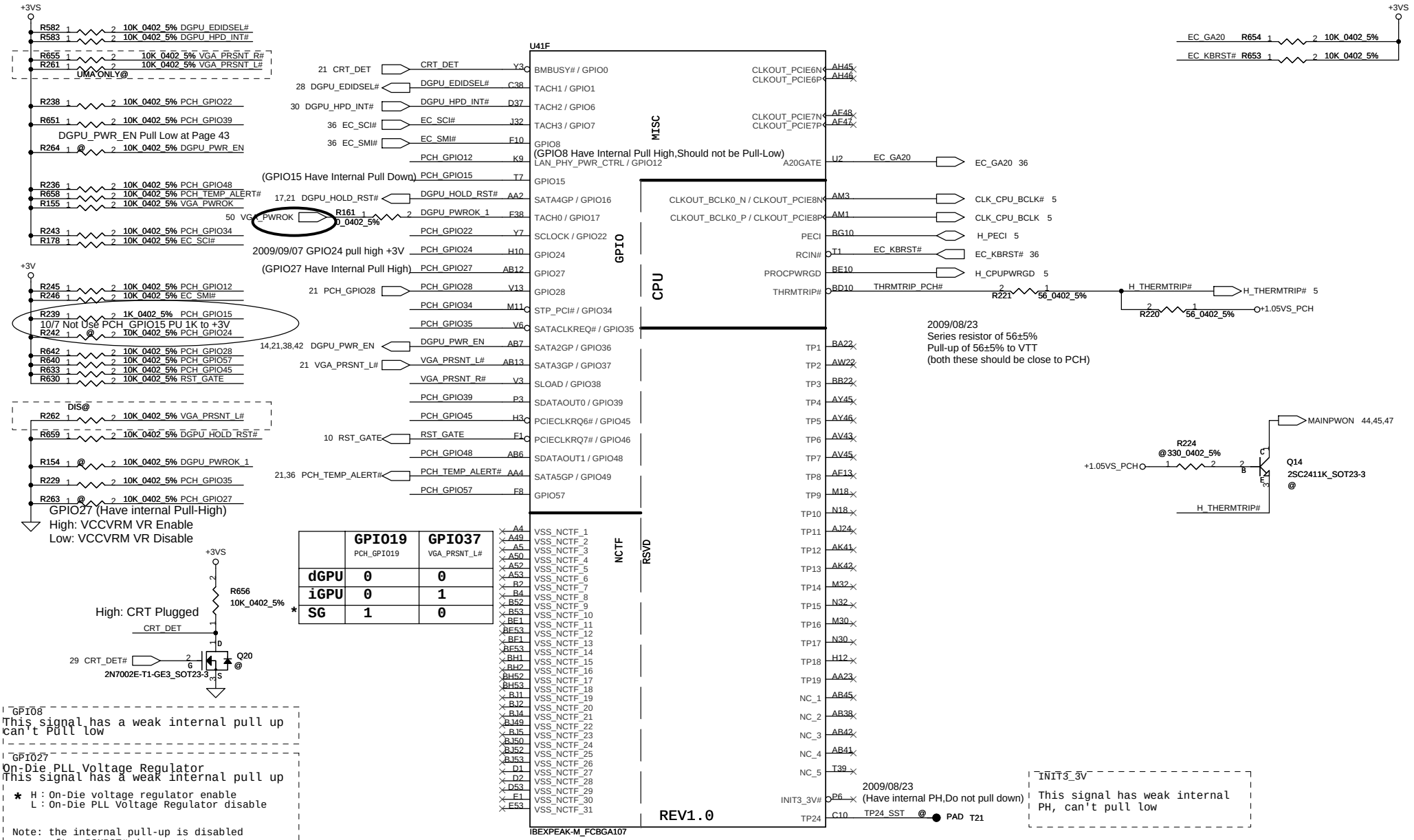

	GPIO19 PCH_GPIO19	GPIO37 VGA_PRSNT_L#
dGPU	0	0
iGPU	0	1
* SG	1	0

Security Classification	Compal Secret Data		
Issued Date	2009/08/01	Deciphered Date	2010/08/01

THIS SHEET OF ENGINEERING DRAWING IS THE PROPRIETARY PROPERTY OF COMPAL ELECTRONICS, INC. AND CONTAINS CONFIDENTIAL AND TRADE SECRET INFORMATION. THIS SHEET MAY NOT BE TRANSFERED FROM THE CUSTODY OF THE COMPETENT DIVISION OF R&D DEPARTMENT EXCEPT AS AUTHORIZED BY COMPAL ELECTRONICS, INC. NEITHER THIS SHEET NOR THE INFORMATION IT CONTAINS MAY BE USED BY OR DISCLOSED TO ANY THIRD PARTY WITHOUT PRIOR WRITTEN CONSENT OF COMPAL ELECTRONICS, INC.

Compal Electronics, Inc.

Title: SCHEMATICS,MB A5893

Size: Custom | Document Number: 401869 | Rev: C

Date: Wednesday, June 30, 2010 | Sheet 18 of 56

WWW.AliSaler.Com

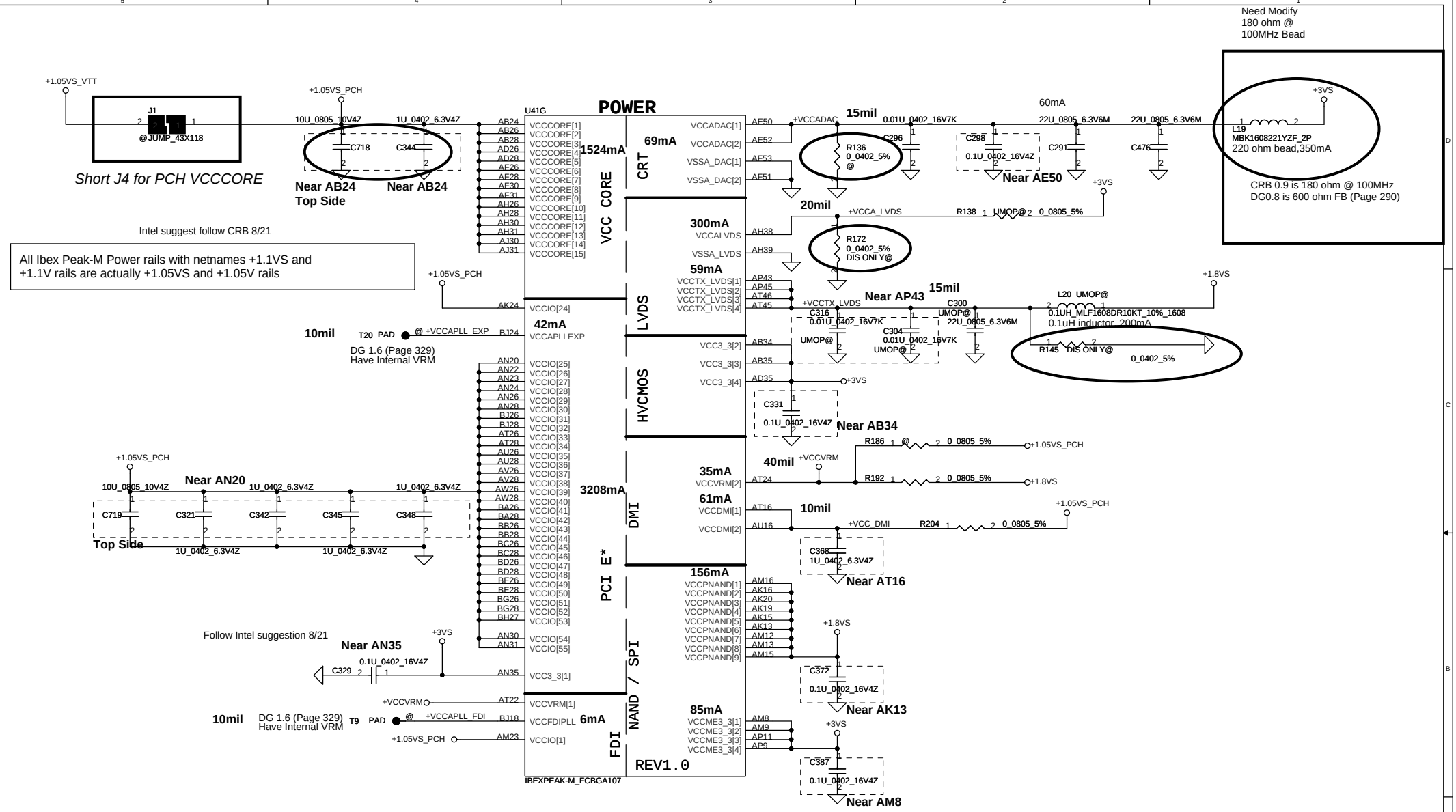

Security Classification	Compal Secret Data		
Issued Date	2009/08/01	Deciphered Date	2010/08/01

THIS SHEET OF ENGINEERING DRAWING IS THE PROPRIETARY PROPERTY OF COMPAL ELECTRONICS, INC. AND CONTAINS CONFIDENTIAL AND TRADE SECRET INFORMATION. THIS SHEET MAY NOT BE TRANSFERED FROM THE CUSTODY OF THE COMPETENT DIVISION OF R&D DEPARTMENT EXCEPT AS AUTHORIZED BY COMPAL ELECTRONICS, INC. NEITHER THIS SHEET NOR THE INFORMATION IT CONTAINS MAY BE USED BY OR DISCLOSED TO ANY THIRD PARTY WITHOUT PRIOR WRITTEN CONSENT OF COMPAL ELECTRONICS, INC.

Compal Electronics, Inc.

Title: SCHEMATICS,MB A5893

Size: Custom | Document Number: 401869 | Rev: C

Date: Wednesday, June 30, 2010 | Sheet 19 of 56

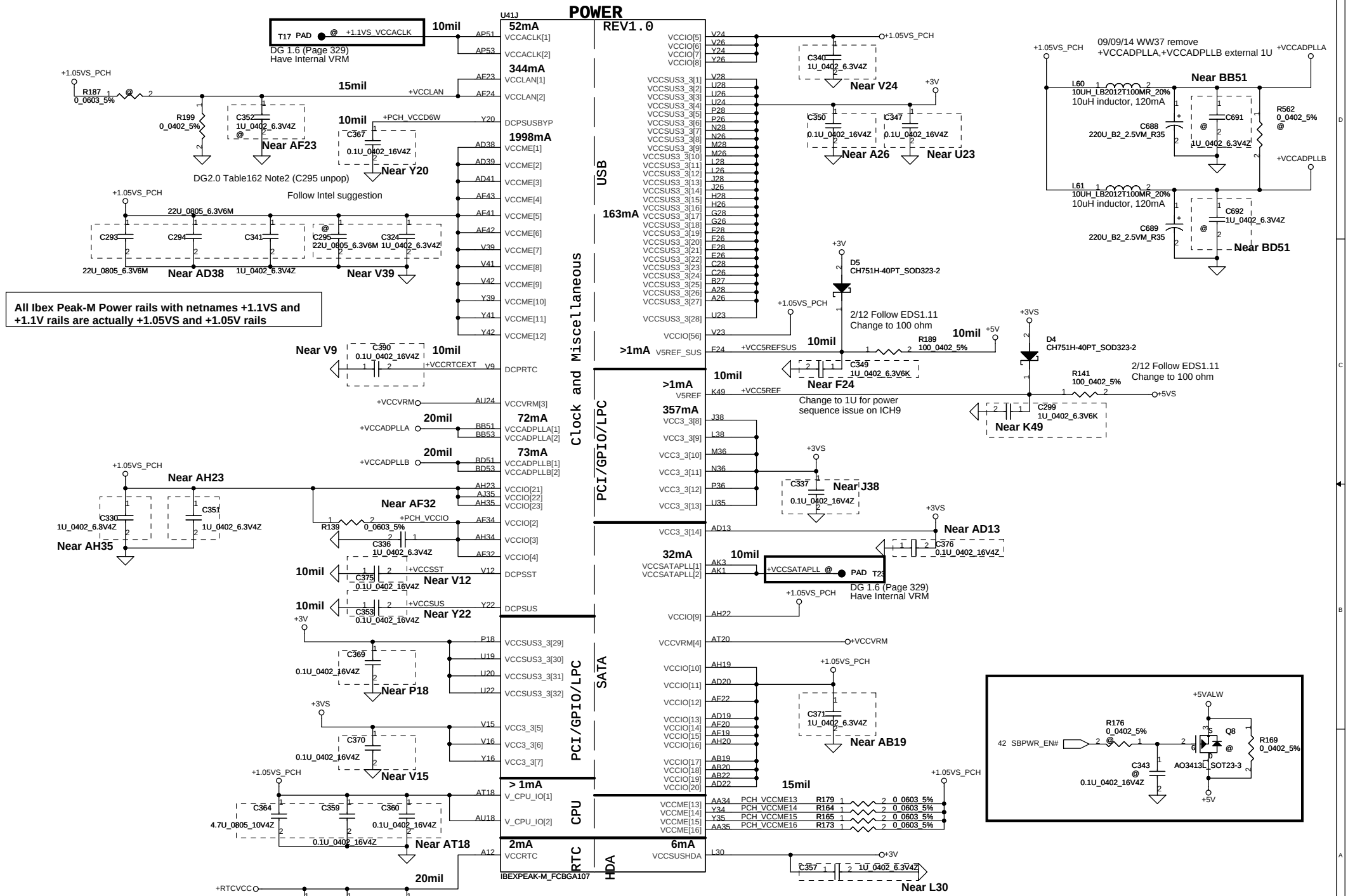

Security Classification	Compal Secret Data		
Issued Date	2009/08/01	Deciphered Date	2010/08/01

THIS SHEET OF ENGINEERING DRAWING IS THE PROPRIETARY PROPERTY OF COMPAL ELECTRONICS, INC. AND CONTAINS CONFIDENTIAL AND TRADE SECRET INFORMATION. THIS SHEET MAY NOT BE TRANSFERED FROM THE CUSTODY OF THE COMPETENT DIVISION OF R&D DEPARTMENT EXCEPT AS AUTHORIZED BY COMPAL ELECTRONICS, INC. NEITHER THIS SHEET NOR THE INFORMATION IT CONTAINS MAY BE USED BY OR DISCLOSED TO ANY THIRD PARTY WITHOUT PRIOR WRITTEN CONSENT OF COMPAL ELECTRONICS, INC.

Compal Electronics, Inc.

Title: SCHEMATICS,MB A5893

Size: Custom | Document Number: 401869 | Rev: C

Date: Wednesday, June 30, 2010 | Sheet 20 of 56

WWW.AliSaler.Com

PCH XDP Port

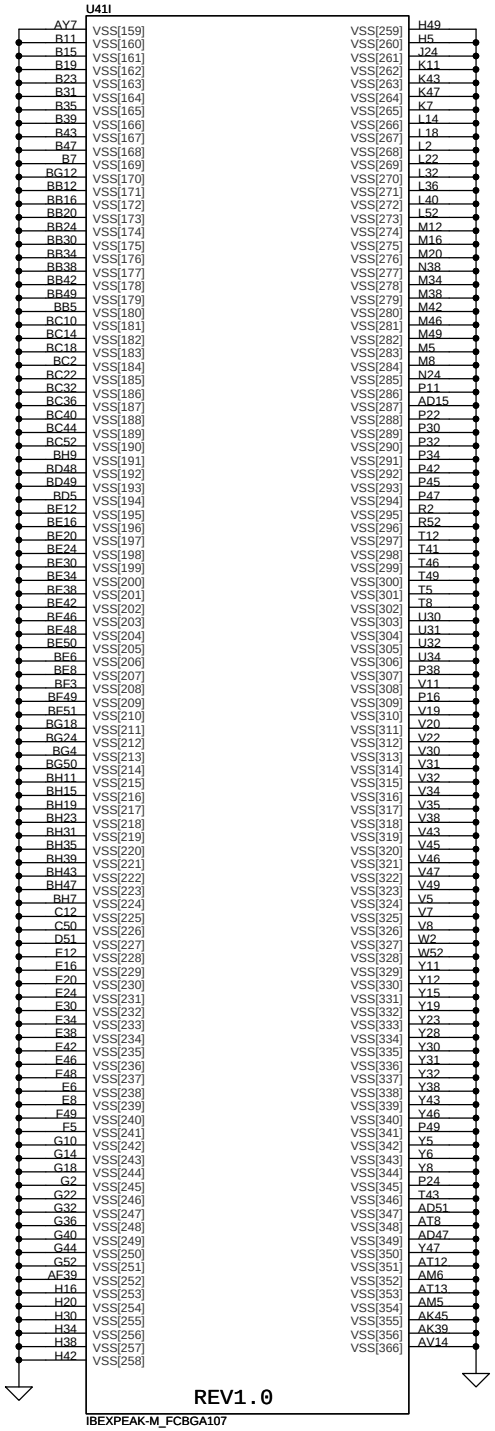

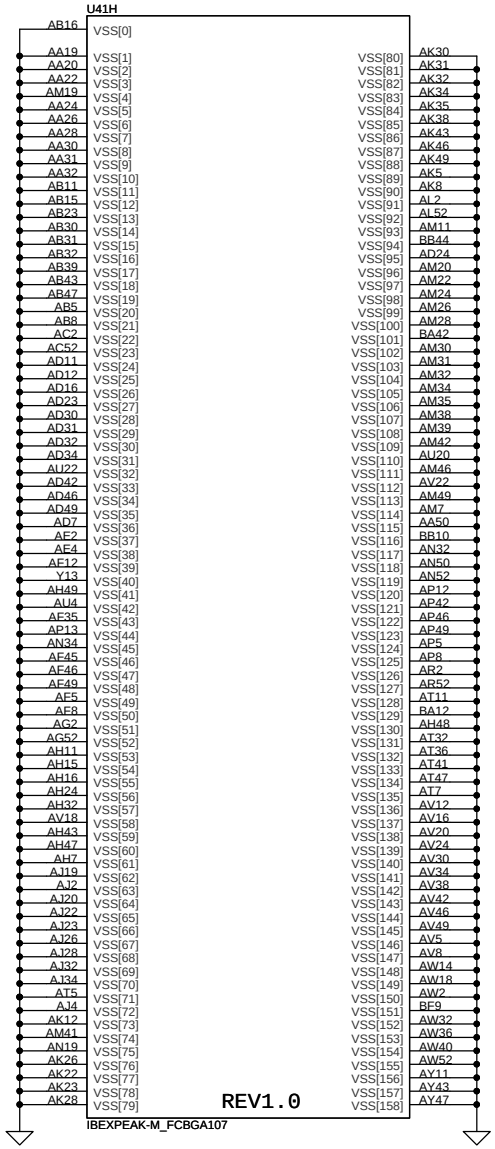

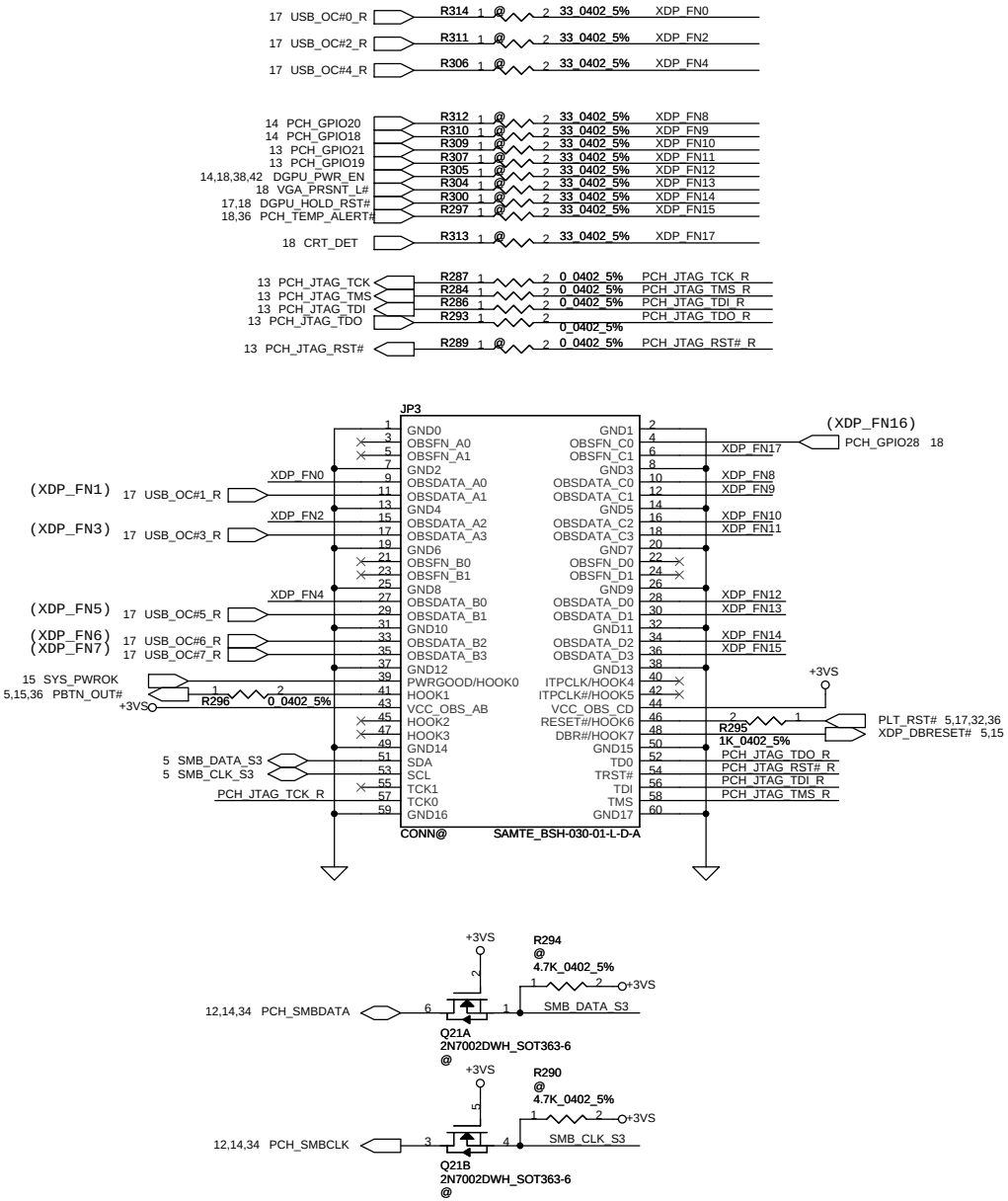

Security Classification	Compal Secret Data		
Issued Date	2009/08/01	Deciphered Date	2010/08/01

THIS SHEET OF ENGINEERING DRAWING IS THE PROPRIETARY PROPERTY OF COMPAL ELECTRONICS, INC. AND CONTAINS CONFIDENTIAL AND TRADE SECRET INFORMATION. THIS SHEET MAY NOT BE TRANSFERED FROM THE CUSTODY OF THE COMPETENT DIVISION OF R&D DEPARTMENT EXCEPT AS AUTHORIZED BY COMPAL ELECTRONICS, INC. NEITHER THIS SHEET NOR THE INFORMATION IT CONTAINS MAY BE USED BY OR DISCLOSED TO ANY THIRD PARTY WITHOUT PRIOR WRITTEN CONSENT OF COMPAL ELECTRONICS, INC.

Compal Electronics, Inc.

Title: SCHEMATICS,MB A5893

Size: Custom | Document Number: 401869 | Rev: C

Date: Wednesday, June 30, 2010 | Sheet 21 of 56

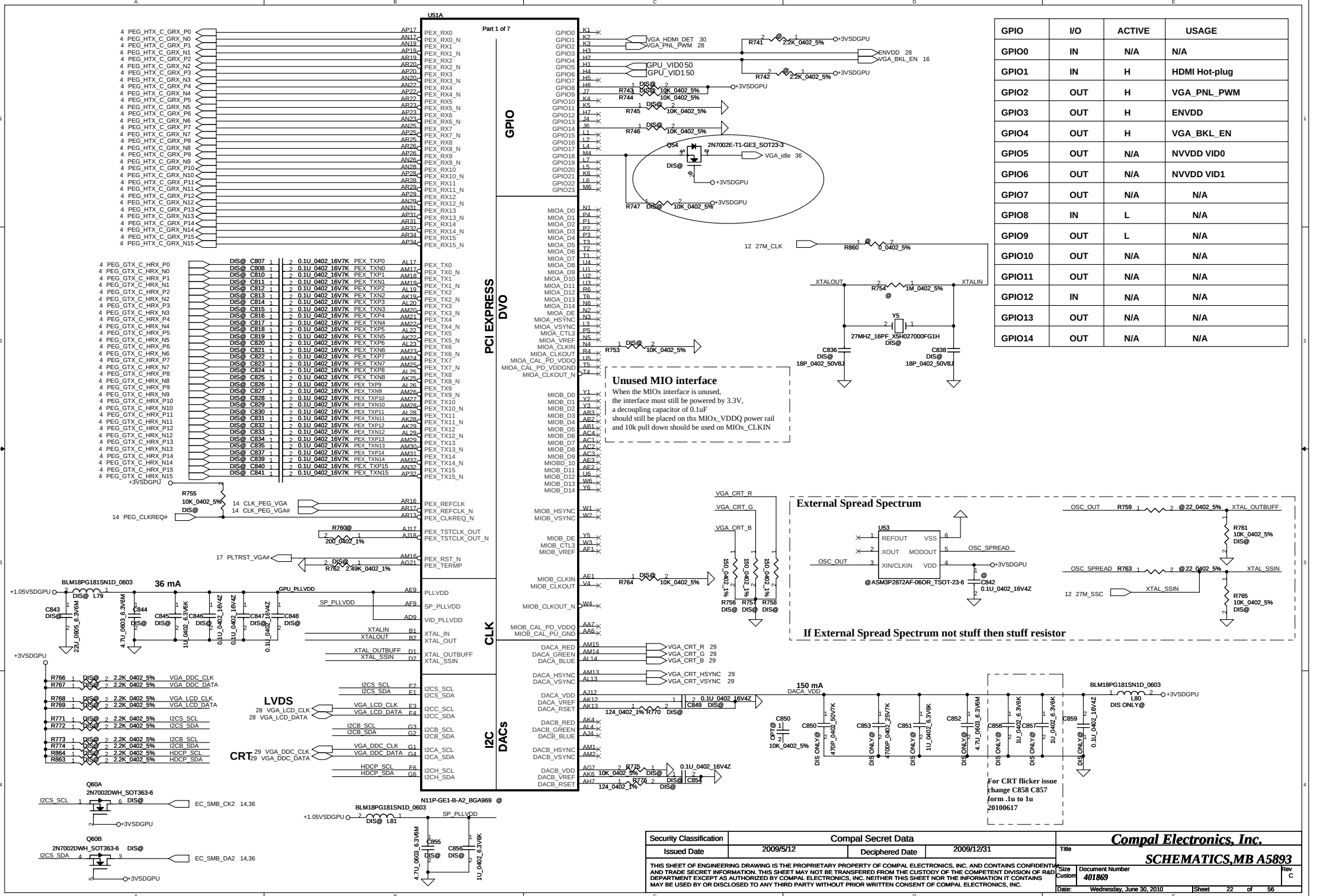

GPIO	I/O	ACTIVE	USAGE
GPIO0	IN	N/A	N/A
GPIO1	IN	H	HDMI Hot-plug
GPIO2	OUT	H	VGA_PNL_PWM
GPIO3	OUT	H	ENVDD
GPIO4	OUT	H	VGA_BKL_EN
GPIO5	OUT	N/A	NVVDD VID0
GPIO6	OUT	N/A	NVVDD VID1
GPIO7	OUT	N/A	N/A
GPIO8	IN	L	N/A
GPIO9	OUT	L	N/A
GPIO10	OUT	N/A	N/A
GPIO11	OUT	N/A	N/A
GPIO12	IN	N/A	N/A
GPIO13	OUT	N/A	N/A
GPIO14	OUT	N/A	N/A

Security Classification	Compal Secret Data		
Issued Date	2009/5/12	Deciphered Date	2009/12/31

THIS SHEET OF ENGINEERING DRAWING IS THE PROPRIETARY PROPERTY OF COMPAL ELECTRONICS, INC. AND CONTAINS CONFIDENTIAL AND TRADE SECRET INFORMATION. THIS SHEET MAY NOT BE TRANSFERED FROM THE CUSTODY OF THE COMPETENT DIVISION OF R&D DEPARTMENT EXCEPT AS AUTHORIZED BY COMPAL ELECTRONICS, INC. NEITHER THIS SHEET NOR THE INFORMATION IT CONTAINS MAY BE USED BY OR DISCLOSED TO ANY THIRD PARTY WITHOUT PRIOR WRITTEN CONSENT OF COMPAL ELECTRONICS, INC.

Compal Electronics, Inc.

Title: SCHEMATICS,MB A5893

Size: Custom | Document Number: 401869 | Rev: C

Date: Wednesday, June 30, 2010 | Sheet 22 of 56

WWW.AliSaler.Com

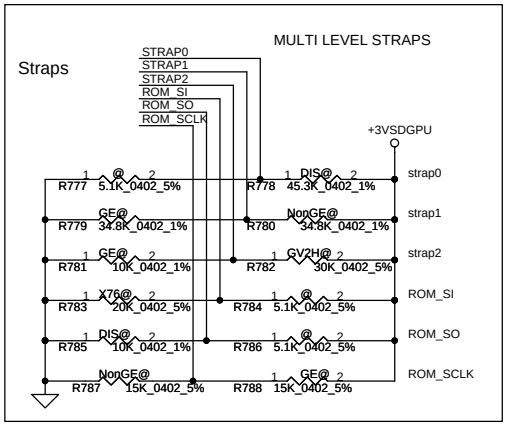

2 GE1@ 1
R782 10K_0402_1%

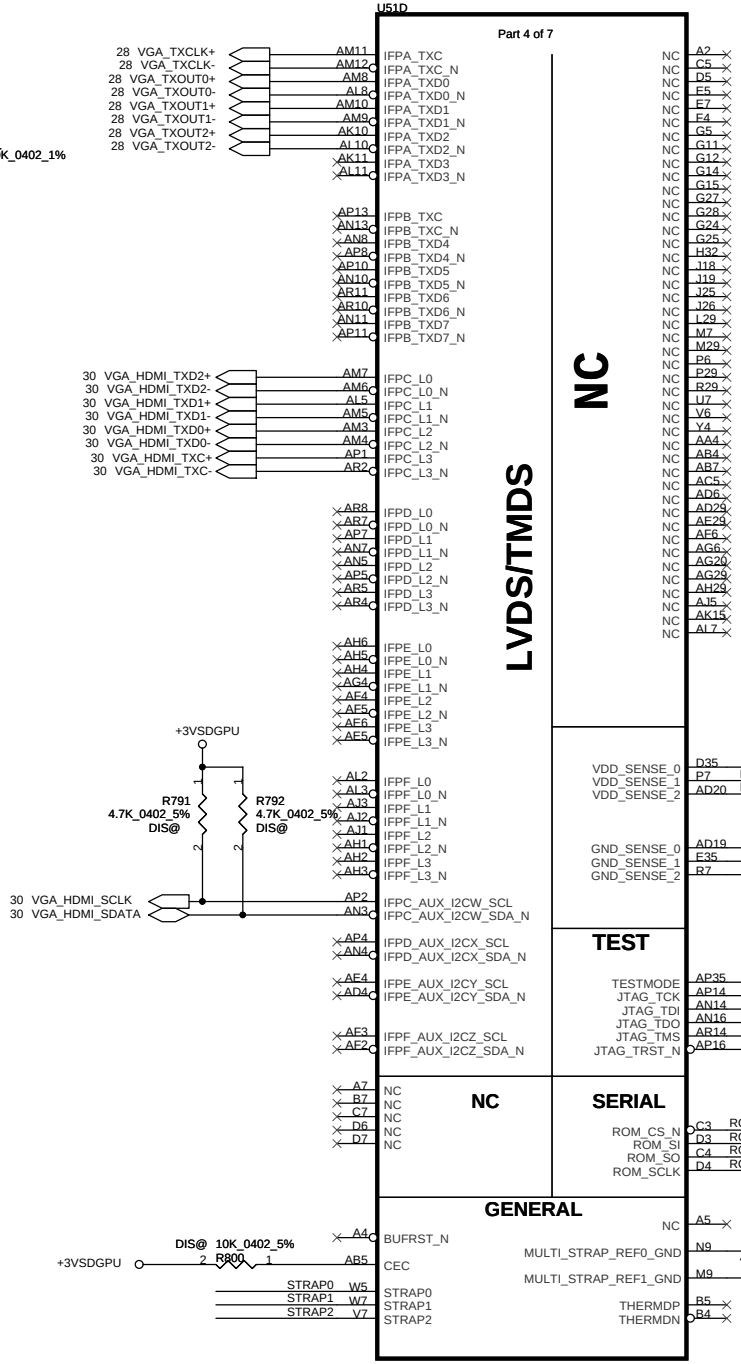

N11P-GE1-B-A2_BGA969 @

20091214 Modify For GV2H	strap0	strap1	strap2	ROM_SI	ROM_SO	ROM_SCLK
64MX16 Samsung SA000035720	H 45K	H 35K	H 30K	L 20K	L 10K	L 15K
64MX16 Hynix SA000032490	H 45K	H 35K	H 30K	L 15K	L 10K	L 15K
20100113 Modify For GE1	**strap0**	**strap1**	**strap2**	**ROM_SI**	**ROM_SO**	**ROM_SCLK**
64MX16 Samsung SA000035720	H 45K	H 35K	H 10K	L 20K	L 10K	L 15K
64MX16 Hynix SA000032490	H 45K	H 35K	H 10K	L 15K	L 10K	L 15K
20100601 Modify For GE	**strap0**	**strap1**	**strap2**	**ROM_SI**	**ROM_SO**	**ROM_SCLK**
64MX16 Samsung SA000035720	H 45K	L 35K	L 10K	L 20K	L 10K	H 15K
64MX16 Hynix SA000032490	H 45K	L 35K	L 10K	L 15K	L 10K	H 15K
128MX16 Samsung SA00003MQ40	H 45K	L 35K	L 10K	L 45K	L 10K	H 15K
128MX16 Hynix SA00003VS10	H 45K	L 35K	L 10K	L 35K	L 10K	H 15K

Mode E Command Mapping GB2-128 Package Femi	Mode C Command Mapping GB1-128 Package	Data Bit	0..31	32..63
FBx_CMD3	FBx_CMD0	CKE_L		
FBx_CMD8	FBx_CMD1	A8	A8	
FBx_CMD2	FBx_CMD2	CS0_L*		
FBx_CMD21	FBx_CMD3	A7	A6	
FBx_CMD24	FBx_CMD4	A2	A1	
FBx_CMD23	FBx_CMD5	A11	A9	
FBx_CMD26	FBx_CMD6	A5	A4	
FBx_CMD7	FBx_CMD7	A0	A12	
FBx_CMD15	FBx_CMD8	CAS*	CAS*	
FBx_CMD13	FBx_CMD9	BA1	A3	
FBx_CMD4	FBx_CMD10	A9	A11	
FBx_CMD18	FBx_CMD11		CS0_H	
FBx_CMD29	FBx_CMD12	BA0	BA0	
FBx_CMD27	FBx_CMD13	BA2	A15	
FBx_CMD6	FBx_CMD14	A3	BA1	
FBx_CMD17	FBx_CMD15		CS1_H	
FBx_CMD19	FBx_CMD16		ODT_H	
FBx_CMD22	FBx_CMD17	A4	A5	
FBx_CMD12	FBx_CMD18	A13	A14	
FBx_CMD28	FBx_CMD19	WE*	A10	
FBx_CMD10	FBx_CMD20	A1	A2	
FBx_CMD25	FBx_CMD21	A10	WE*	
FBx_CMD9	FBx_CMD22	A12	A0	
FBx_CMD1	FBx_CMD23	CS1_L*		
FBx_CMD11	FBx_CMD24	RAS*	RAS*	
FBx_CMD0	FBx_CMD25	ODT_L		
FBx_CMD5	FBx_CMD26	A6	A7	
FBx_CMD16	FBx_CMD27		CKE_H	
FBx_CMD20	FBx_CMD28	RST	RST	
FBx_CMD14	FBx_CMD29	A14	A13	
FBx_CMD30	FBx_CMD30	A15	BA2	
FBx_CMD31				
			LOW	HIGH

Security Classification	Compal Secret Data		
Issued Date	2009/5/12	Deciphered Date	2010/04/15

THIS SHEET OF ENGINEERING DRAWING IS THE PROPRIETARY PROPERTY OF COMPAL ELECTRONICS, INC. AND CONTAINS CONFIDENTIAL AND TRADE SECRET INFORMATION. THIS SHEET MAY NOT BE TRANSFERED FROM THE CUSTODY OF THE COMPETENT DIVISION OF R&D DEPARTMENT EXCEPT AS AUTHORIZED BY COMPAL ELECTRONICS, INC. NEITHER THIS SHEET NOR THE INFORMATION IT CONTAINS MAY BE USED BY OR DISCLOSED TO ANY THIRD PARTY WITHOUT PRIOR WRITTEN CONSENT OF COMPAL ELECTRONICS, INC.

Compal Electronics, Inc.

Title: SCHEMATICS,MB A5893

Size: Custom | Document Number: 401869 | Rev

Date: Wednesday, June 30, 2010 | Sheet 23 of 56

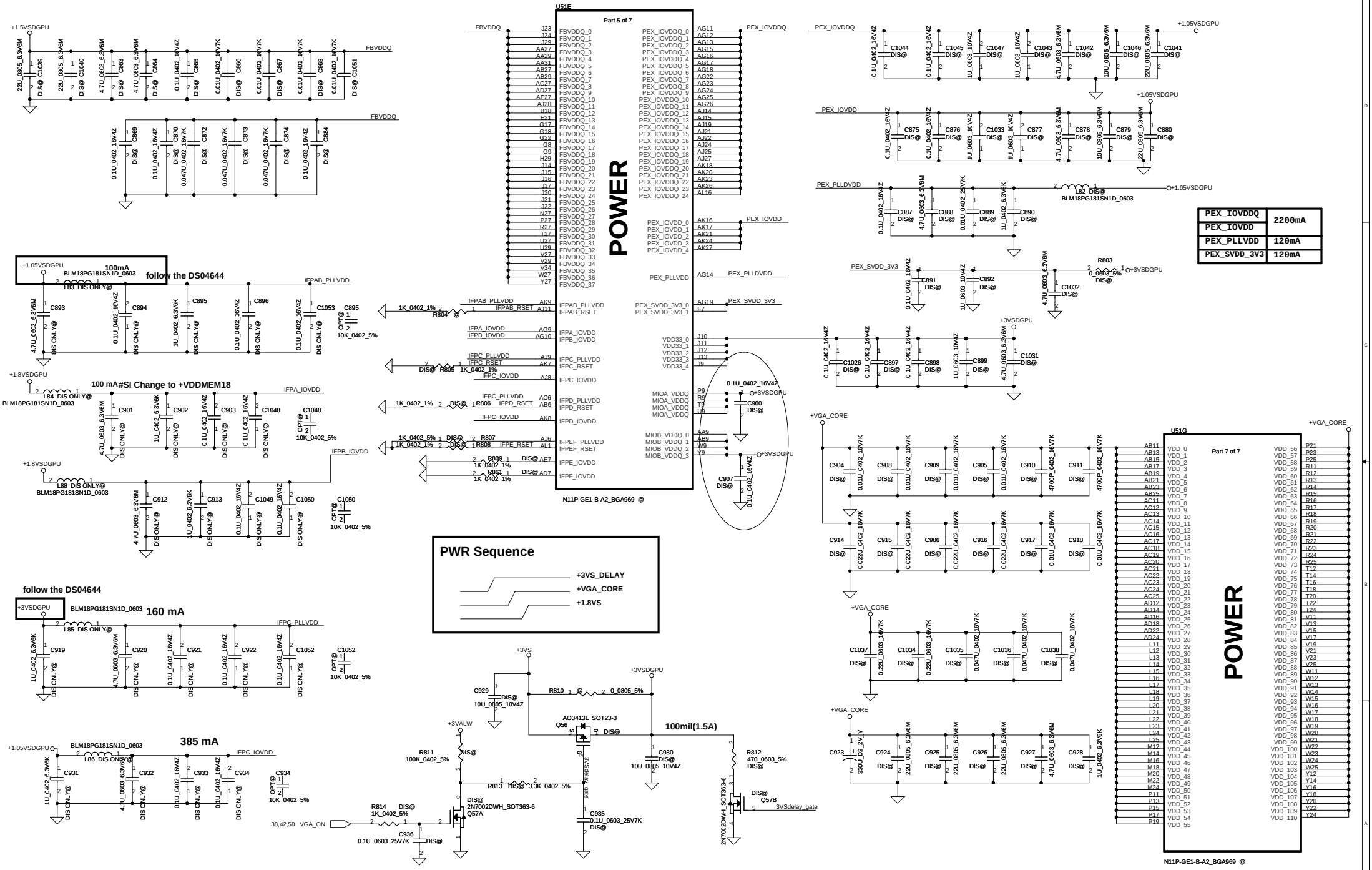

PEX_IOVDDQ	2200mA
PEX_IOVDD	
PEX_PLLVDD	120mA
PEX_SVDD_3V3	120mA

Security Classification	Compal Secret Data		
Issued Date	2009/5/12	Deciphered Date	2009/12/31

THIS SHEET OF ENGINEERING DRAWING IS THE PROPRIETARY PROPERTY OF COMPAL ELECTRONICS, INC. AND CONTAINS CONFIDENTIAL AND TRADE SECRET INFORMATION. THIS SHEET MAY NOT BE TRANSFERED FROM THE CUSTODY OF THE COMPETENT DIVISION OF R&D DEPARTMENT EXCEPT AS AUTHORIZED BY COMPAL ELECTRONICS, INC. NEITHER THIS SHEET NOR THE INFORMATION IT CONTAINS MAY BE USED BY OR DISCLOSED TO ANY THIRD PARTY WITHOUT PRIOR WRITTEN CONSENT OF COMPAL ELECTRONICS, INC.

Compal Electronics, Inc.

Title: **SCHEMATICS,MB A5893**

Size: Custom | Document Number: 401869 | Rev: C

Date: Wednesday, June 30, 2010 | Sheet 24 of 56

WWW.AliSaler.Com

VRAM Interface

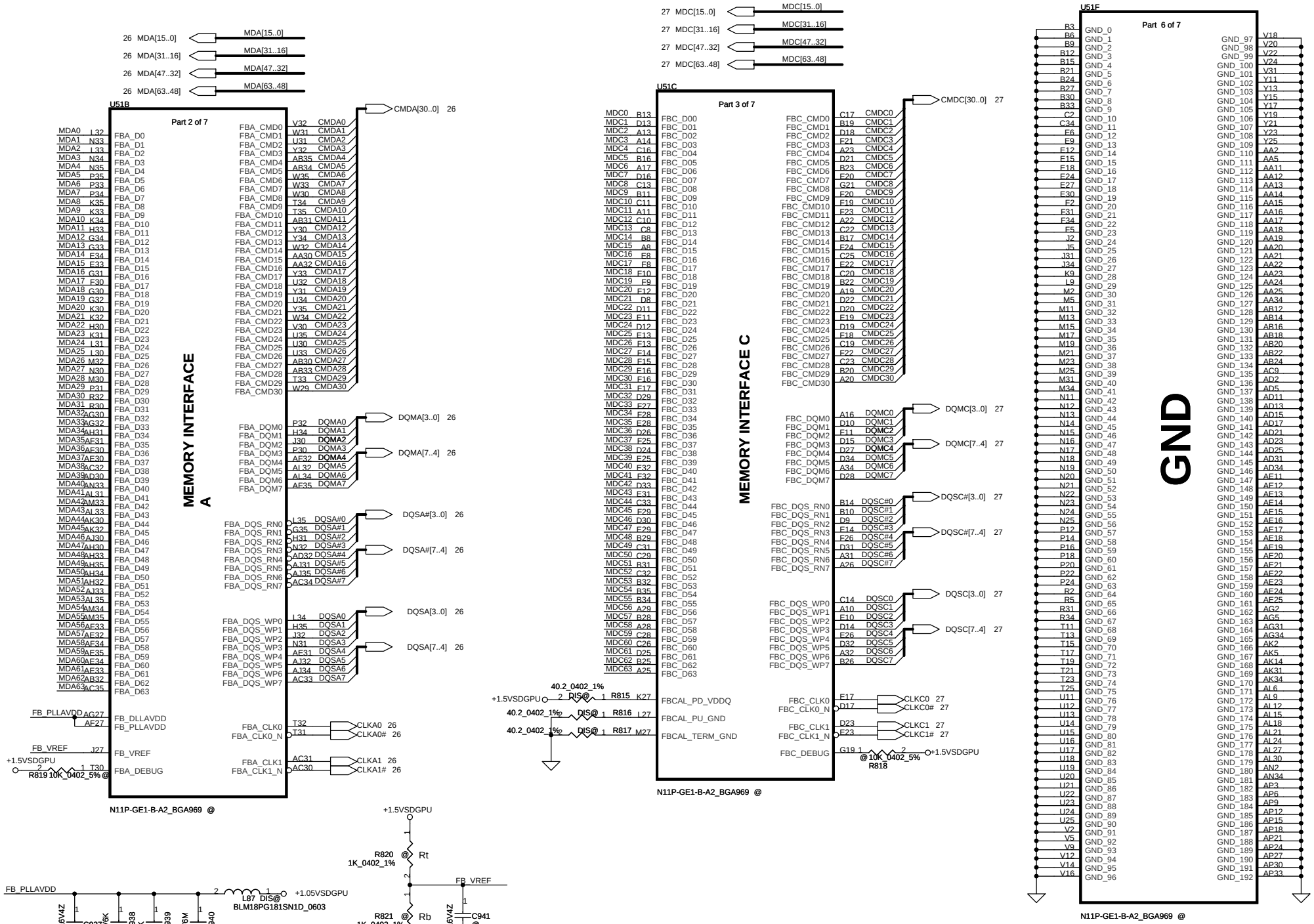

Security Classification	Compal Secret Data		
Issued Date	2009/5/12	Deciphered Date	2009/12/31

THIS SHEET OF ENGINEERING DRAWING IS THE PROPRIETARY PROPERTY OF COMPAL ELECTRONICS, INC. AND CONTAINS CONFIDENTIAL AND TRADE SECRET INFORMATION. THIS SHEET MAY NOT BE TRANSFERED FROM THE CUSTODY OF THE COMPETENT DIVISION OF R&D DEPARTMENT EXCEPT AS AUTHORIZED BY COMPAL ELECTRONICS, INC. NEITHER THIS SHEET NOR THE INFORMATION IT CONTAINS MAY BE USED BY OR DISCLOSED TO ANY THIRD PARTY WITHOUT PRIOR WRITTEN CONSENT OF COMPAL ELECTRONICS, INC.

Compal Electronics, Inc.

Title: **SCHEMATICS,MB A5893**

Size: Custom | Document Number: 401869 | Rev: C

Date: Wednesday, June 30, 2010 | Sheet 25 of 56

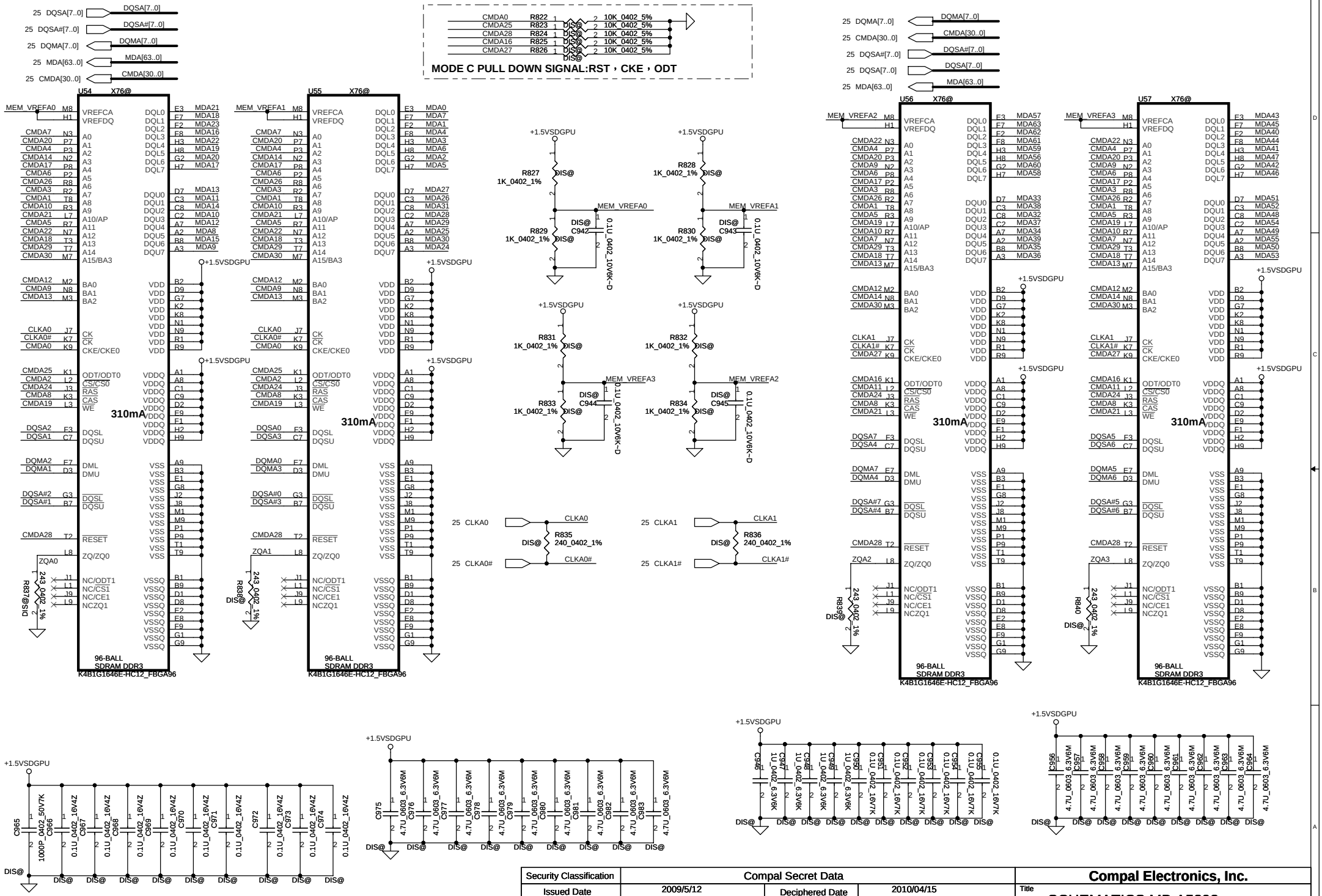

Security Classification	Compal Secret Data		
Issued Date	2009/5/12	Deciphered Date	2010/04/15

THIS SHEET OF ENGINEERING DRAWING IS THE PROPRIETARY PROPERTY OF COMPAL ELECTRONICS, INC. AND CONTAINS CONFIDENTIAL AND TRADE SECRET INFORMATION. THIS SHEET MAY NOT BE TRANSFERED FROM THE CUSTODY OF THE COMPETENT DIVISION OF R&D DEPARTMENT EXCEPT AS AUTHORIZED BY COMPAL ELECTRONICS, INC. NEITHER THIS SHEET NOR THE INFORMATION IT CONTAINS MAY BE USED BY OR DISCLOSED TO ANY THIRD PARTY WITHOUT PRIOR WRITTEN CONSENT OF COMPAL ELECTRONICS, INC.

Compal Electronics, Inc.

Title: SCHEMATICS,MB A5893

Size: Custom | Document Number: 401869 | Rev

Date: Wednesday, June 30, 2010 | Sheet 26 of 56

WWW.AliSaler.Com

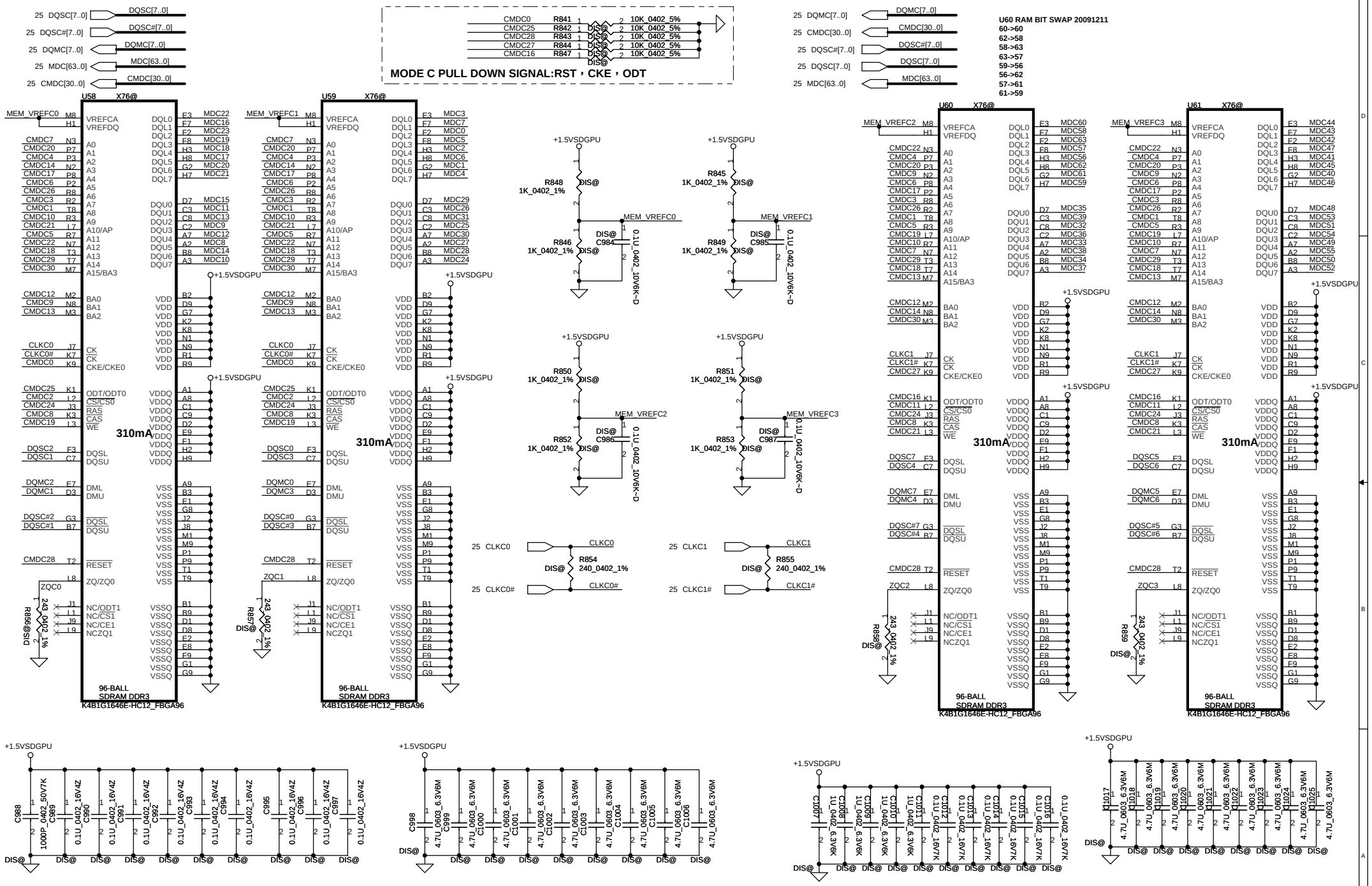

Security Classification	Compal Secret Data		
Issued Date	2009/5/12	Deciphered Date	2010/04/15

THIS SHEET OF ENGINEERING DRAWING IS THE PROPRIETARY PROPERTY OF COMPAL ELECTRONICS, INC. AND CONTAINS CONFIDENTIAL AND TRADE SECRET INFORMATION. THIS SHEET MAY NOT BE TRANSFERED FROM THE CUSTODY OF THE COMPETENT DIVISION OF R&D DEPARTMENT EXCEPT AS AUTHORIZED BY COMPAL ELECTRONICS, INC. NEITHER THIS SHEET NOR THE INFORMATION IT CONTAINS MAY BE USED BY OR DISCLOSED TO ANY THIRD PARTY WITHOUT PRIOR WRITTEN CONSENT OF COMPAL ELECTRONICS, INC.

Compal Electronics, Inc.

Title: SCHEMATICS,MB A5893

Size: Custom | Document Number: 401869 | Rev: C

Date: Wednesday, June 30, 2010 | Sheet 27 of 56

LCD POWER CIRCUIT

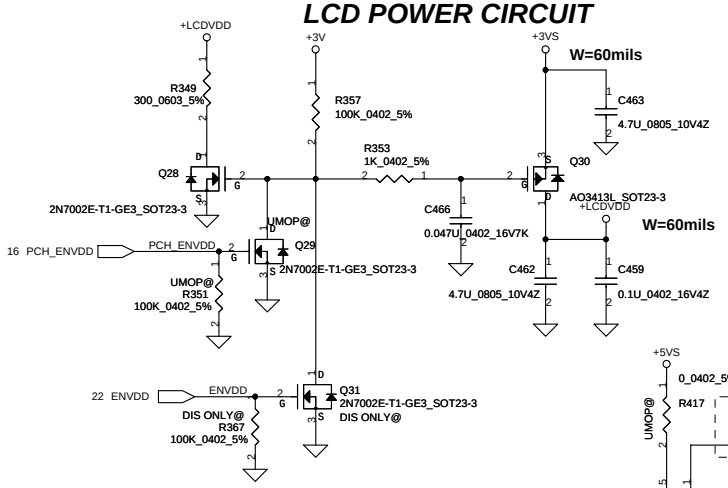

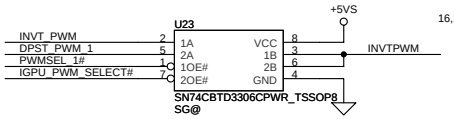

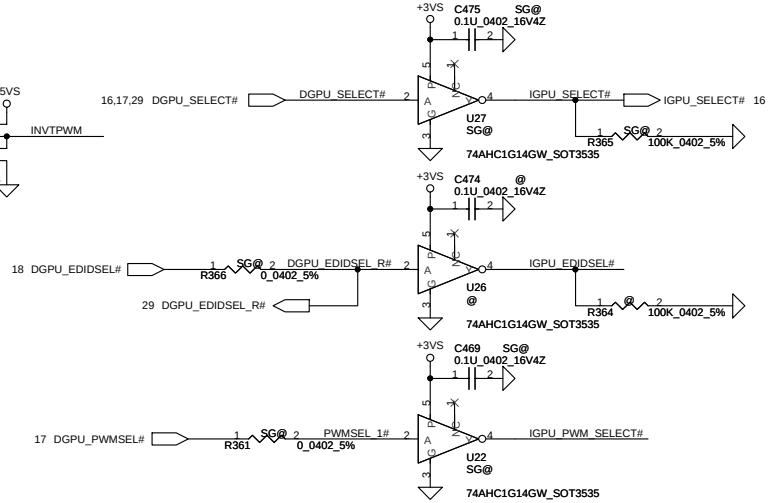

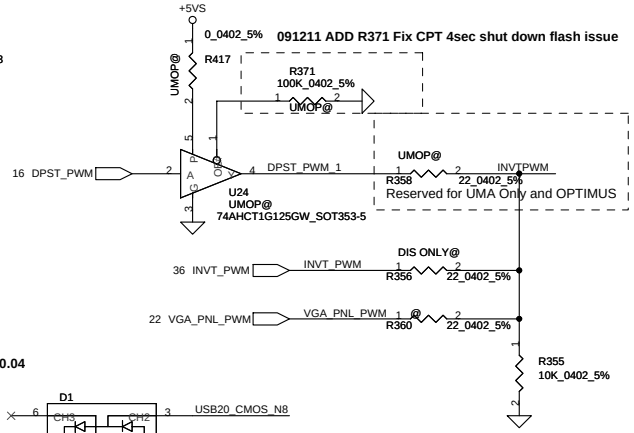

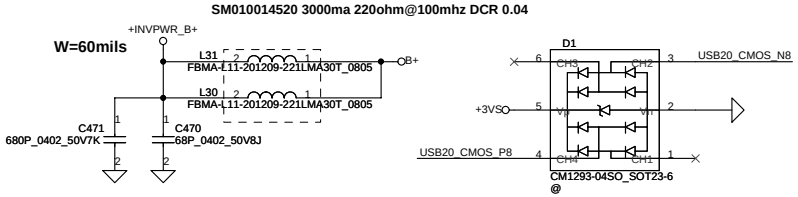

LCD/LED PANEL Conn.

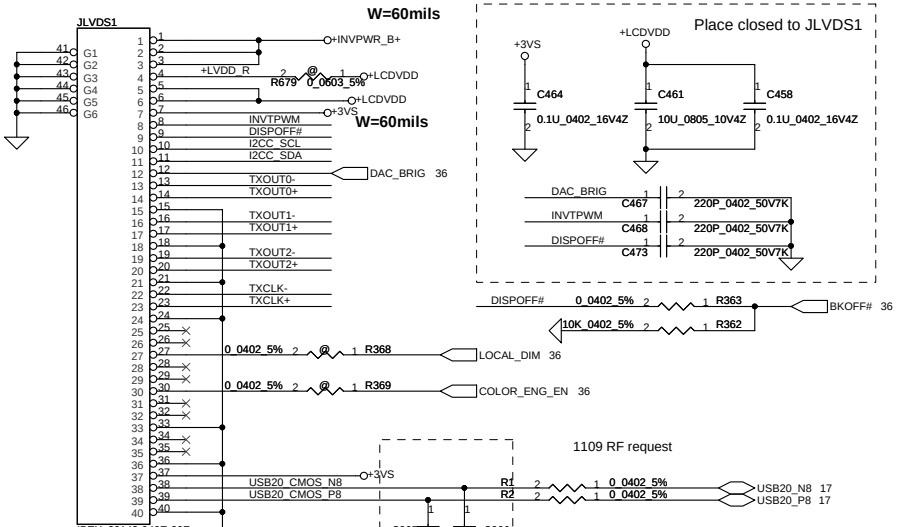

SWITCHABLE

2009/8/27 ADD SWITCHABLE

SEL1	L	B1	DIS
SEL2	H	B2	UMA

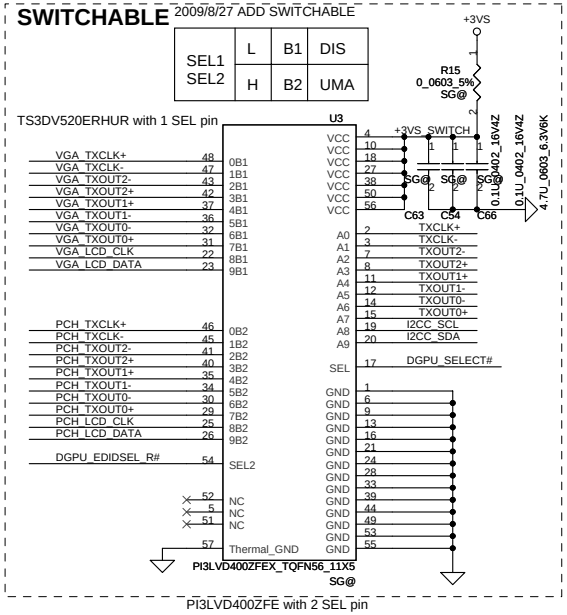

PI3LVD400ZFE with 2 SEL pin

UMA ONLY / Optimus

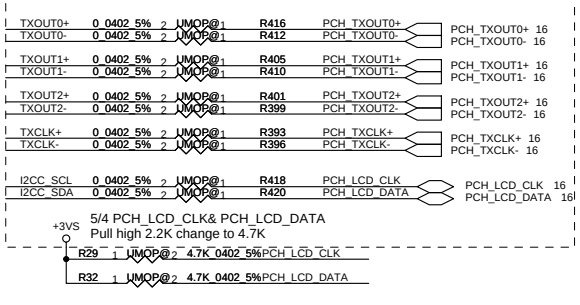

Discrete ONLY

Security Classification	Compal Secret Data		
Issued Date	2009/08/01	Deciphered Date	2010/08/01

THIS SHEET OF ENGINEERING DRAWING IS THE PROPRIETARY PROPERTY OF COMPAL ELECTRONICS, INC. AND CONTAINS CONFIDENTIAL AND TRADE SECRET INFORMATION. THIS SHEET MAY NOT BE TRANSFERRED FROM THE CUSTODY OF THE COMPETENT DIVISION OF R&D DEPARTMENT EXCEPT AS AUTHORIZED BY COMPAL ELECTRONICS, INC. NEITHER THIS SHEET NOR THE INFORMATION IT CONTAINS MAY BE USED BY OR DISCLOSED TO ANY THIRD PARTY WITHOUT PRIOR WRITTEN CONSENT OF COMPAL ELECTRONICS, INC.

Compal Electronics, Inc.

Title: SCHEMATICS,MB A5893

Size: Custom | Document Number: 401869 | Rev: C

Date: Wednesday, June 30, 2010 | Sheet 28 of 56

WWW.AliSaler.Com

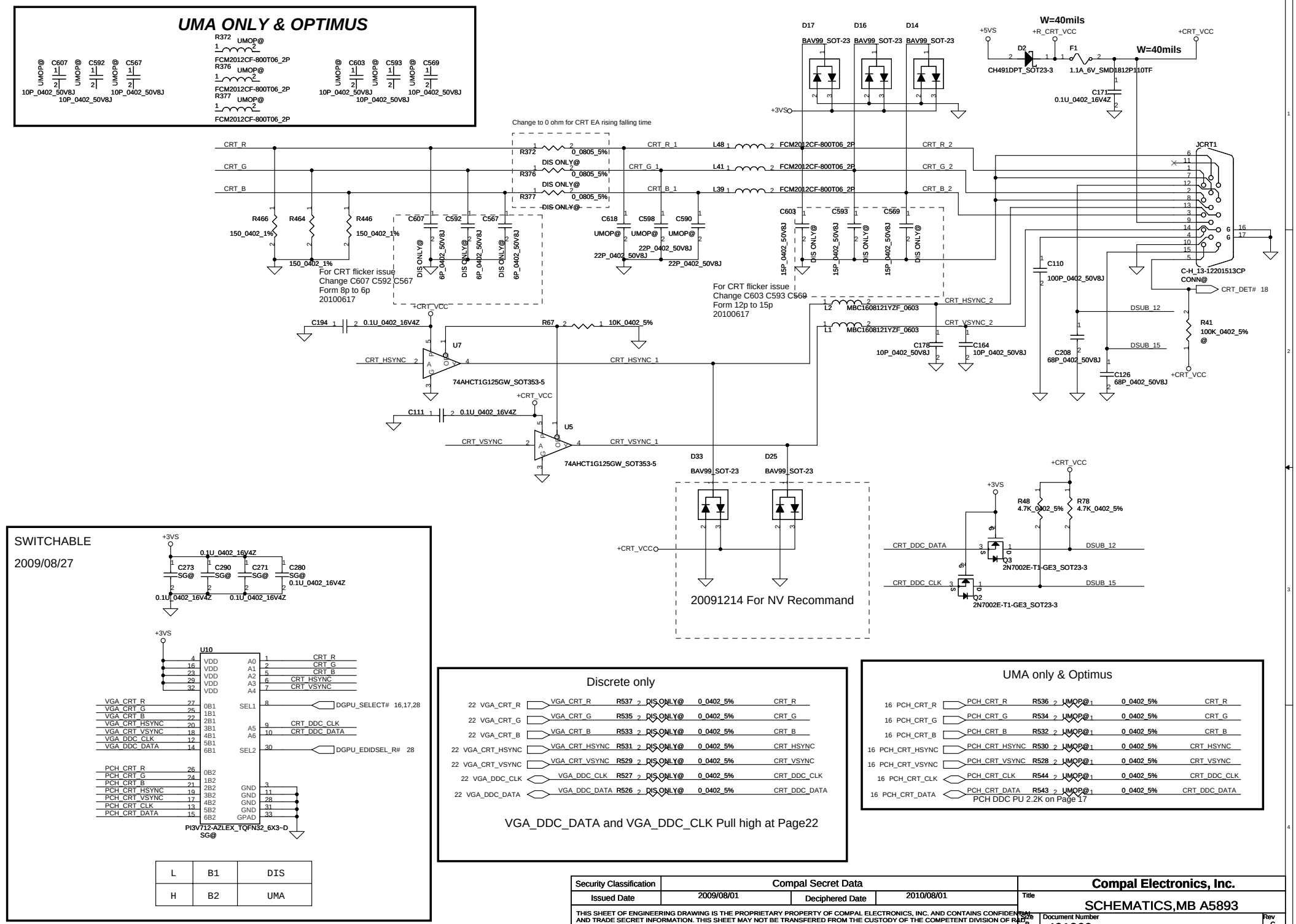
UMA ONLY & OPTIMUS
R372 UMOP@ FCM2012CF-800T06_2P
R376 UMOP@ FCM2012CF-800T06_2P
R377 UMOP@ FCM2012CF-800T06_2P
C607 UMOP@ 10P_0402_50V8J
C592 UMOP@ 10P_0402_50V8J
C567 UMOP@ 10P_0402_50V8J
C603 UMOP@ 10P_0402_50V8J
C593 UMOP@ 10P_0402_50V8J
C569 UMOP@ 10P_0402_50V8J
Change to 0 ohm for CRT EA rising falling time
R372 0_0805_5% DIS ONLY@
R376 0_0805_5% DIS ONLY@
R377 0_0805_5% DIS ONLY@
CRT_R
CRT_G
CRT_B
CRT_R_1
CRT_G_1
CRT_B_1
L48 FCM2012CF-800T06_2P
L41 FCM2012CF-800T06_2P
L39 FCM2012CF-800T06_2P
CRT_R_2
CRT_G_2
CRT_B_2
D17 BAV99_SOT-23
D16 BAV99_SOT-23
D14 BAV99_SOT-23
+3VS
+5VS
+R_CRT_VCC
+CRT_VCC
W=40mils
D2 CH491DPT_SOT23-3
F1 1.1A_6V_SMD1812P110TF
C171 0.1U_0402_16V4Z
JCRT1
C-H_13-12201513CP
CONN@
CRT_DET# 18
R466 150_0402_1%
R464 150_0402_1%
R446 150_0402_1%
C607 DIS ONLY@ 6P_0402_50V8J
C592 DIS ONLY@ 6P_0402_50V8J
C567 DIS ONLY@ 6P_0402_50V8J
For CRT flicker issue
Change C607 C592 C567
Form 8p to 6p
20100617
C618 UMOP@ 22P_0402_50V8J
C598 UMOP@ 22P_0402_50V8J
C590 UMOP@ 22P_0402_50V8J
C603 DIS ONLY@ 15P_0402_50V8J
C593 DIS ONLY@ 15P_0402_50V8J
C569 DIS ONLY@ 15P_0402_50V8J
For CRT flicker issue
Change C603 C593 C569
Form 12p to 15p
20100617
C110 100P_0402_50V8J
C208 68P_0402_50V8J
C126 68P_0402_50V8J
DSUB_12
DSUB_15
R41 100K_0402_5% @
C194 0.1U_0402_16V4Z
R67 10K_0402_5%
U7 74AHCT1G125GW_SOT353-5
CRT_HSYNC
CRT_HSYNC_1
CRT_HSYNC_2
L2 MBC1608121YZF_0603
L1 MBC1608121YZF_0603
CRT_VSYNC_2
C178 10P_0402_50V8J
C164 10P_0402_50V8J
C111 0.1U_0402_16V4Z
U5 74AHCT1G125GW_SOT353-5
CRT_VSYNC
CRT_VSYNC_1
D33 BAV99_SOT-23
D25 BAV99_SOT-23
20091214 For NV Recommand
R48 4.7K_0402_5%
R78 4.7K_0402_5%
CRT_DDC_DATA
CRT_DDC_CLK
Q3 2N7002E-T1-GE3_SOT23-3
Q2 2N7002E-T1-GE3_SOT23-3
SWITCHABLE
2009/08/27
C273 SG@ 0.1U_0402_16V4Z
C290 SG@ 0.1U_0402_16V4Z
C271 SG@ 0.1U_0402_16V4Z
C280 SG@ 0.1U_0402_16V4Z
U10 PI3V712-AZLEX_TQFN32_6X3-D SG@
VGA_CRT_R
VGA_CRT_G
VGA_CRT_B
VGA_CRT_HSYNC
VGA_CRT_VSYNC
VGA_DDC_CLK
VGA_DDC_DATA
PCH_CRT_R
PCH_CRT_G
PCH_CRT_B
PCH_CRT_HSYNC
PCH_CRT_VSYNC
PCH_CRT_CLK
PCH_CRT_DATA
DGPU_SELECT# 16,17,28
DGPU_EDIDSEL_R# 28
L B1 DIS
H B2 UMA
Discrete only
22 VGA_CRT_R R537 DIS ONLY@ 0_0402_5% CRT_R
22 VGA_CRT_G R535 DIS ONLY@ 0_0402_5% CRT_G
22 VGA_CRT_B R533 DIS ONLY@ 0_0402_5% CRT_B
22 VGA_CRT_HSYNC R531 DIS ONLY@ 0_0402_5% CRT_HSYNC
22 VGA_CRT_VSYNC R529 DIS ONLY@ 0_0402_5% CRT_VSYNC
22 VGA_DDC_CLK R527 DIS ONLY@ 0_0402_5% CRT_DDC_CLK
22 VGA_DDC_DATA R526 DIS ONLY@ 0_0402_5% CRT_DDC_DATA
VGA_DDC_DATA and VGA_DDC_CLK Pull high at Page22
UMA only & Optimus
16 PCH_CRT_R R536 UMOP@ 0_0402_5% CRT_R
16 PCH_CRT_G R534 UMOP@ 0_0402_5% CRT_G
16 PCH_CRT_B R532 UMOP@ 0_0402_5% CRT_B
16 PCH_CRT_HSYNC R530 UMOP@ 0_0402_5% CRT_HSYNC
16 PCH_CRT_VSYNC R528 UMOP@ 0_0402_5% CRT_VSYNC
16 PCH_CRT_CLK R544 UMOP@ 0_0402_5% CRT_DDC_CLK
16 PCH_CRT_DATA R543 UMOP@ 0_0402_5% CRT_DDC_DATA
PCH DDC PU 2.2K on Page 17
Security Classification Compal Secret Data
Issued Date 2009/08/01 Deciphered Date 2010/08/01
Compal Electronics, Inc.
Title SCHEMATICS,MB A5893
Size B Document Number 401869 Rev C
Date: Wednesday, June 30, 2010 Sheet 29 of 56
THIS SHEET OF ENGINEERING DRAWING IS THE PROPRIETARY PROPERTY OF COMPAL ELECTRONICS, INC. AND CONTAINS CONFIDENTIAL AND TRADE SECRET INFORMATION. THIS SHEET MAY NOT BE TRANSFERED FROM THE CUSTODY OF THE COMPETENT DIVISION OF R&D DEPARTMENT EXCEPT AS AUTHORIZED BY COMPAL ELECTRONICS, INC. NEITHER THIS SHEET NOR THE INFORMATION IT CONTAINS MAY BE USED BY OR DISCLOSED TO ANY THIRD PARTY WITHOUT PRIOR WRITTEN CONSENT OF COMPAL ELECTRONICS, INC.

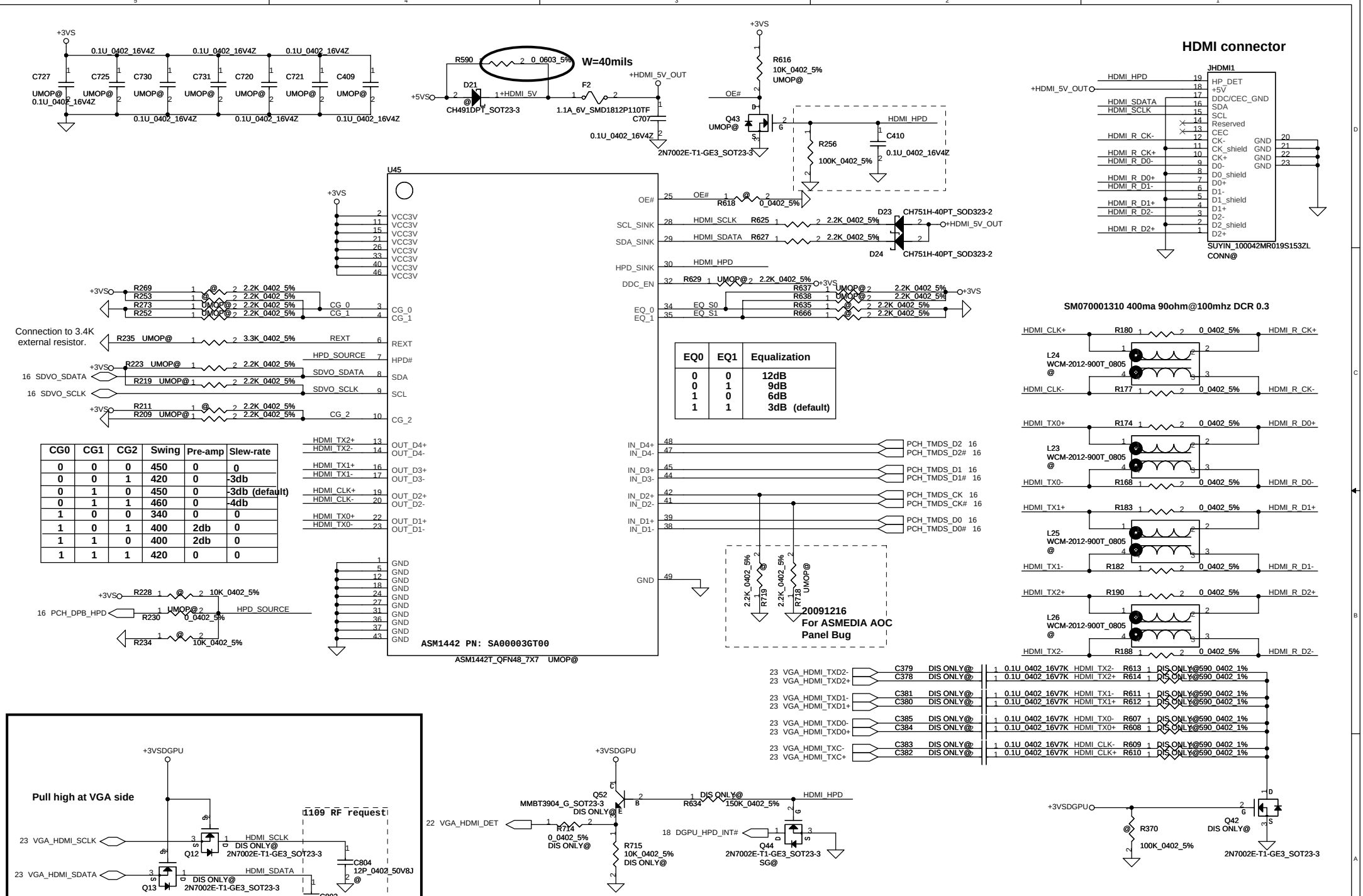

EQ0	EQ1	Equalization
0	0	12dB
0	1	9dB
1	0	6dB
1	1	3dB (default)

CG0	CG1	CG2	Swing	Pre-amp	Slew-rate
0	0	0	450	0	0
0	0	1	420	0	-3db
0	1	0	450	0	-3db (default)
0	1	1	460	0	-4db
1	0	0	340	0	0
1	0	1	400	2db	0
1	1	0	400	2db	0
1	1	1	420	0	0

WWW.AliSaler.Com

Security Classification	Compal Secret Data		
Issued Date	2009/08/01	Deciphered Date	2010/08/01

THIS SHEET OF ENGINEERING DRAWING IS THE PROPRIETARY PROPERTY OF COMPAL ELECTRONICS, INC. AND CONTAINS CONFIDENTIAL AND TRADE SECRET INFORMATION. THIS SHEET MAY NOT BE TRANSFERED FROM THE CUSTODY OF THE COMPETENT DIVISION OF R&D DEPARTMENT EXCEPT AS AUTHORIZED BY COMPAL ELECTRONICS, INC. NEITHER THIS SHEET NOR THE INFORMATION IT CONTAINS MAY BE USED BY OR DISCLOSED TO ANY THIRD PARTY WITHOUT PRIOR WRITTEN CONSENT OF COMPAL ELECTRONICS, INC.

Compal Electronics, Inc.

Title: SCHEMATICS,MB A5893

Size: Custom | Document Number: 401869 | Rev: C

Date: Wednesday, June 30, 2010 | Sheet 30 of 56

SATA HDD1 Conn.

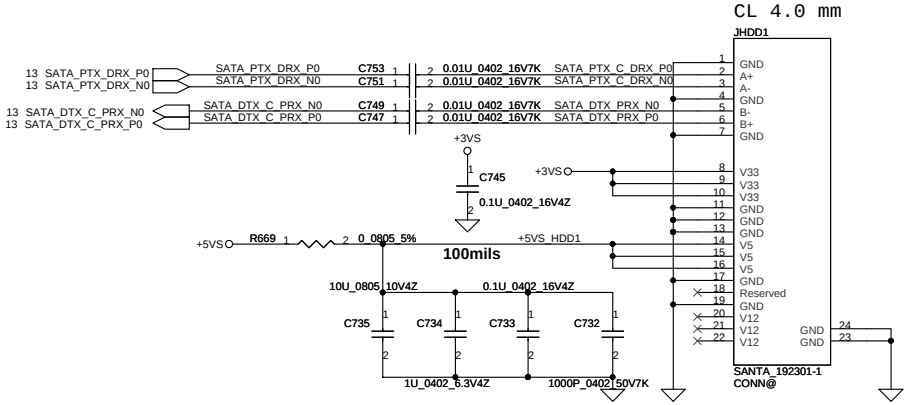

SATA ODD Conn.

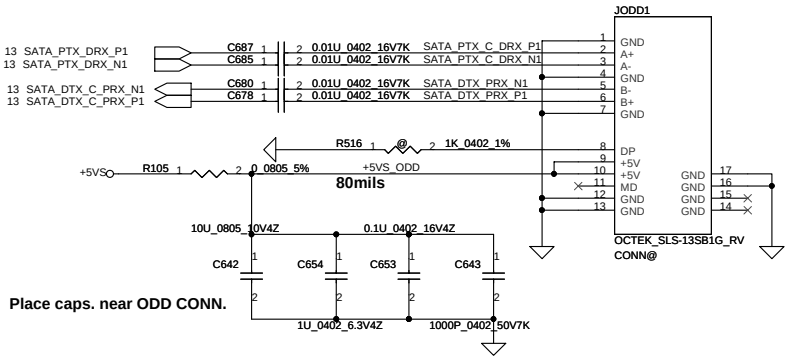

Place caps. near ODD CONN.

Security Classification	Compal Secret Data			Compal Electronics, Inc.
Issued Date	2008/08/10	Deciphered Date	2010/08/01	Title: SCHEMATICS,MB A5893
THIS SHEET OF ENGINEERING DRAWING IS THE PROPRIETARY PROPERTY OF COMPAL ELECTRONICS, INC. AND CONTAINS CONFIDENTIAL AND TRADE SECRET INFORMATION. THIS SHEET MAY NOT BE TRANSFERED FROM THE CUSTODY OF THE COMPETENT DIVISION OF R&D DEPARTMENT EXCEPT AS AUTHORIZED BY COMPAL ELECTRONICS, INC. NEITHER THIS SHEET NOR THE INFORMATION IT CONTAINS MAY BE USED BY OR DISCLOSED TO ANY THIRD PARTY WITHOUT PRIOR WRITTEN CONSENT OF COMPAL ELECTRONICS, INC.				Size: Custom / Document Number: 401869 / Rev: C
				Date: Wednesday, June 30, 2010 / Sheet 31 of 56

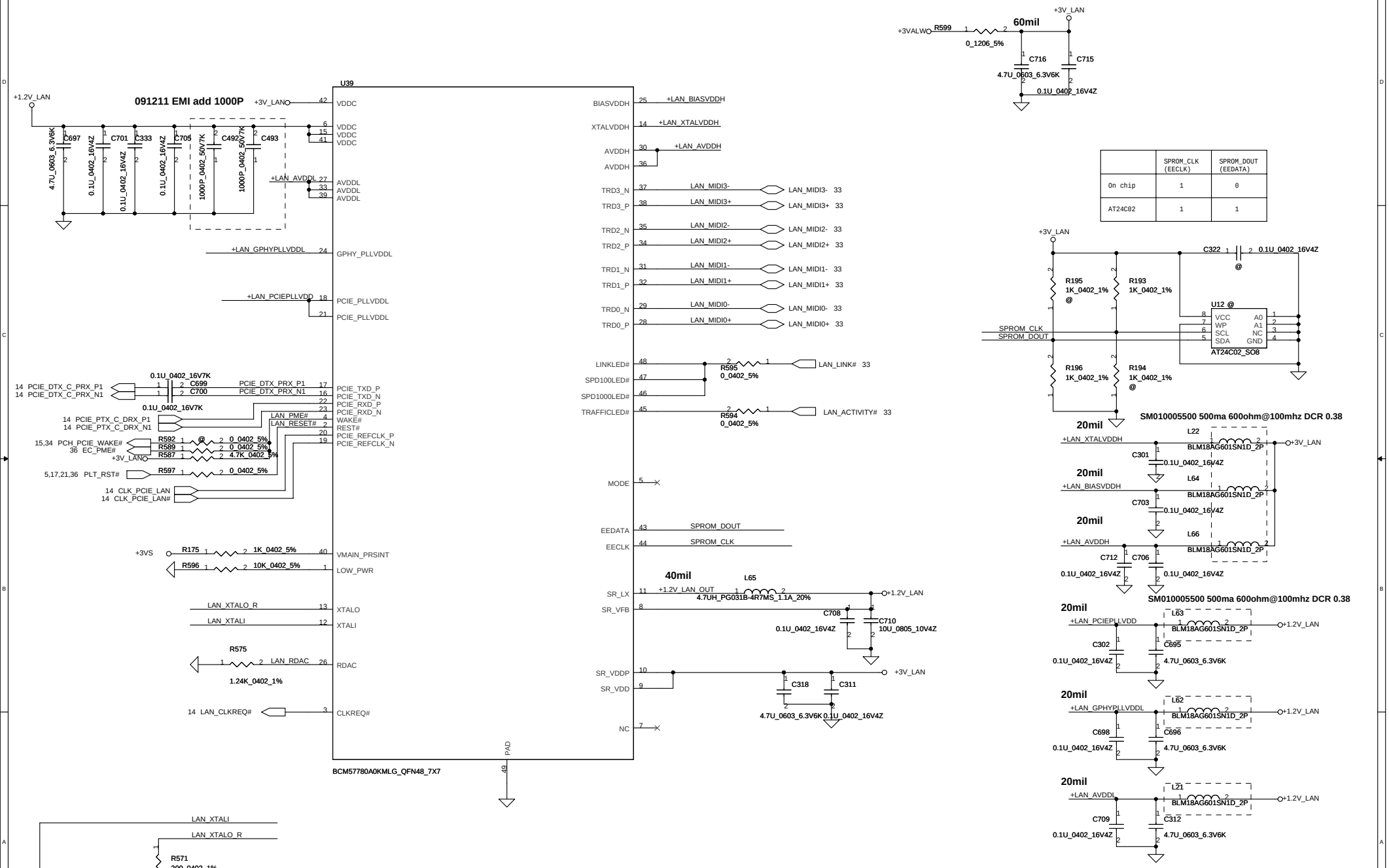

	SPROM_CLK (EECLK)	SPROM_DOUT (EEDATA)
On chip	1	0
AT24C02	1	1

WWW.AliSaler.Com

Security Classification	Compal Secret Data		
Issued Date	2008/08/10	Deciphered Date	2010/08/01

THIS SHEET OF ENGINEERING DRAWING IS THE PROPRIETARY PROPERTY OF COMPAL ELECTRONICS, INC. AND CONTAINS CONFIDENTIAL AND TRADE SECRET INFORMATION. THIS SHEET MAY NOT BE TRANSFERRED FROM THE CUSTODY OF THE COMPETENT DIVISION OF R&D DEPARTMENT EXCEPT AS AUTHORIZED BY COMPAL ELECTRONICS, INC. NEITHER THIS SHEET NOR THE INFORMATION IT CONTAINS MAY BE USED BY OR DISCLOSED TO ANY THIRD PARTY WITHOUT PRIOR WRITTEN CONSENT OF COMPAL ELECTRONICS, INC.

Compal Electronics, Inc.

Title: SCHEMATICS,MB A5893

Size: Custom | Document Number: 401869 | Rev: C

Date: Wednesday, June 30, 2010 | Sheet 32 of 56

LAN Connector

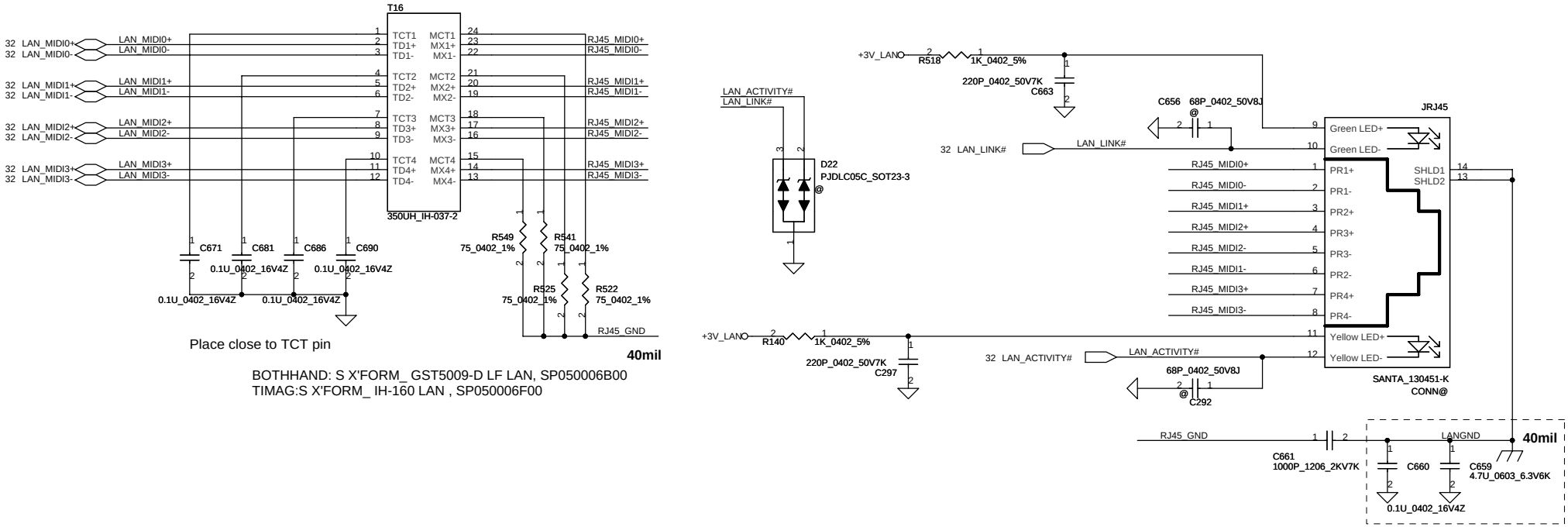

Place close to TCT pin

BOTHHAND: S X'FORM_ GST5009-D LF LAN, SP050006B00
TIMAG:S X'FORM_ IH-160 LAN , SP050006F00

Security Classification	Compal Secret Data			Compal Electronics, Inc.
Issued Date	2008/08/10	Deciphered Date	2010/08/01	Title: SCHEMATICS,MB A5893
				Size: Custom; Document Number: 401869; Rev: C
				Date: Wednesday, June 30, 2010; Sheet 33 of 56

THIS SHEET OF ENGINEERING DRAWING IS THE PROPRIETARY PROPERTY OF COMPAL ELECTRONICS, INC. AND CONTAINS CONFIDENTIAL AND TRADE SECRET INFORMATION. THIS SHEET MAY NOT BE TRANSFERED FROM THE CUSTODY OF THE COMPETENT DIVISION OF R&D DEPARTMENT EXCEPT AS AUTHORIZED BY COMPAL ELECTRONICS, INC. NEITHER THIS SHEET NOR THE INFORMATION IT CONTAINS MAY BE USED BY OR DISCLOSED TO ANY THIRD PARTY WITHOUT PRIOR WRITTEN CONSENT OF COMPAL ELECTRONICS, INC.

For Wireless LAN

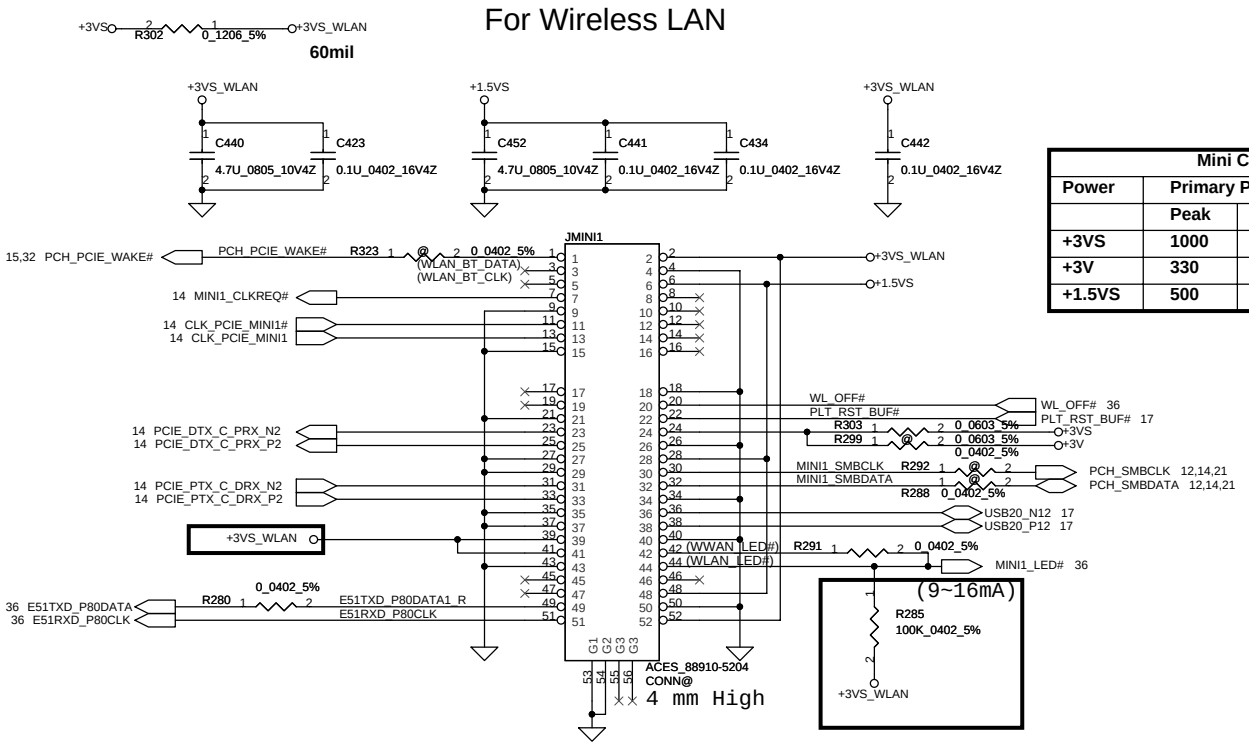

Mini Card Power Rating			
Power	Primary Power (mA)		Auxiliary Power (mA)
	Peak	Normal	Normal
+3VS	1000	750	
+3V	330	250	250 (wake enable)
+1.5VS	500	375	5 (Not wake enable)

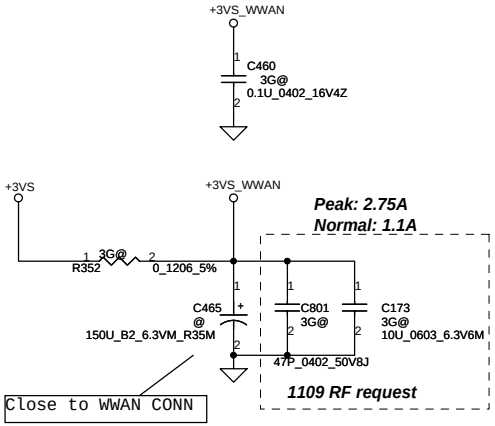

For 3G / GPS

To 3G Module Connect (Port 9)

LS-5895

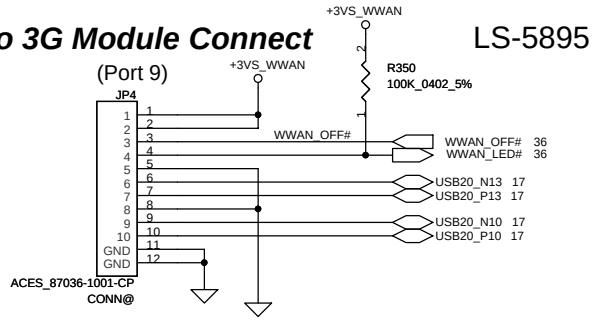

Security Classification	Compal Secret Data		
Issued Date	2008/08/10	Deciphered Date	2010/08/01

THIS SHEET OF ENGINEERING DRAWING IS THE PROPRIETARY PROPERTY OF COMPAL ELECTRONICS, INC. AND CONTAINS CONFIDENTIAL AND TRADE SECRET INFORMATION. THIS SHEET MAY NOT BE TRANSFERED FROM THE CUSTODY OF THE COMPETENT DIVISION OF R&D DEPARTMENT EXCEPT AS AUTHORIZED BY COMPAL ELECTRONICS, INC. NEITHER THIS SHEET NOR THE INFORMATION IT CONTAINS MAY BE USED BY OR DISCLOSED TO ANY THIRD PARTY WITHOUT PRIOR WRITTEN CONSENT OF COMPAL ELECTRONICS, INC.

Compal Electronics, Inc.

Title: SCHEMATICS,MB A5893

Size: Custom | Document Number: 401869 | Rev: C

Date: Wednesday, June 30, 2010 | Sheet 34 of 56

WWW.AliSaler.Com

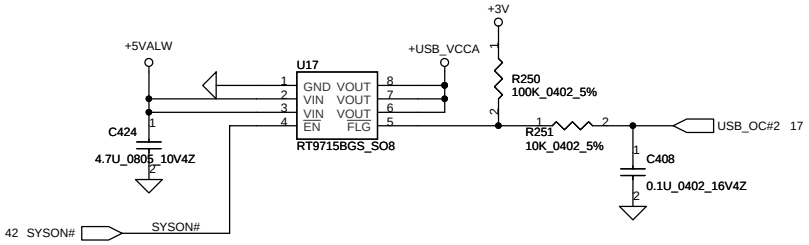

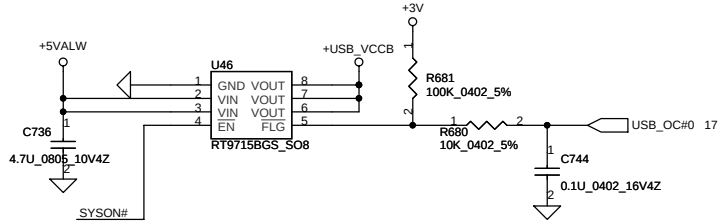

2009/08/14 CHANGE cap

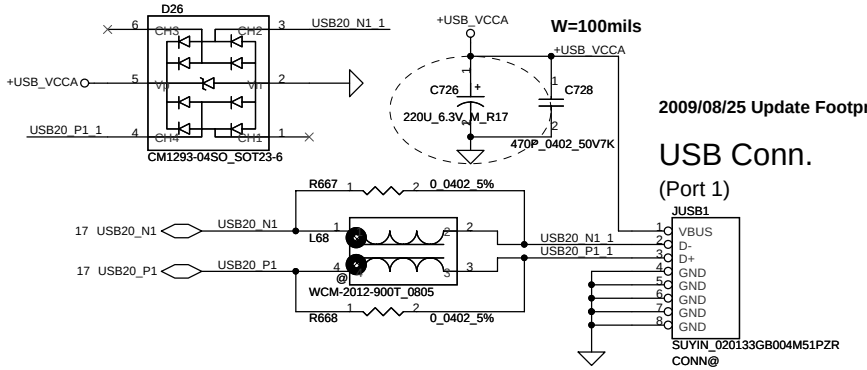

2009/08/25 Update Footprint(follow NAL00)

USB Conn.

(Port 1)

USB/B Conn. LS-5891

(Port 0,2)

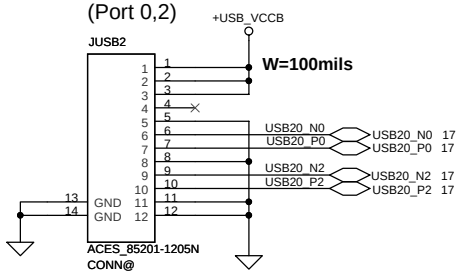

2009/08/24 CHANGE Conn to FFC Type

Card Reader Conn. LS-5896

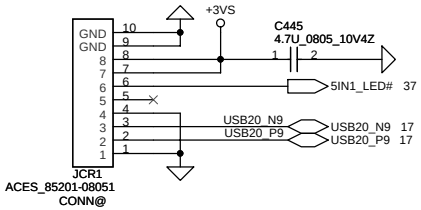

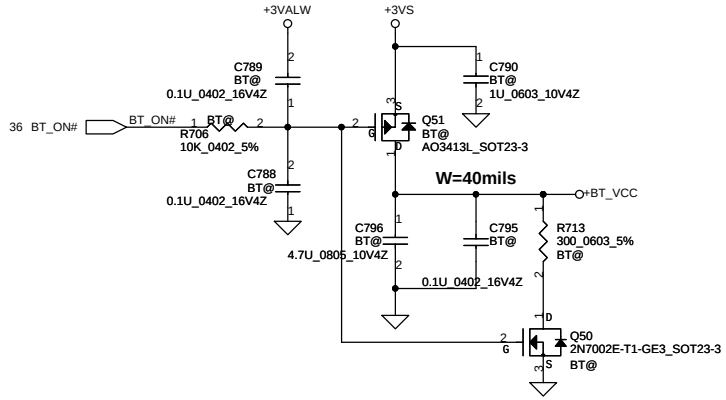

BT Conn.

(Port 11)

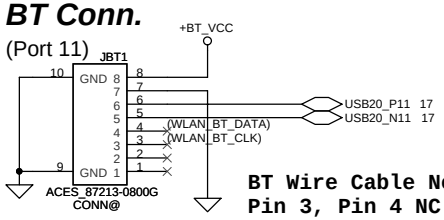

BT Wire Cable Note:
Pin 3, Pin 4 NC

Security Classification	Compal Secret Data			Compal Electronics, Inc.
Issued Date	2008/08/10	Deciphered Date	2010/08/01	Title: SCHEMATICS,MB A5893
				Size: Custom; Document Number: 401869; Rev: C
				Date: Wednesday, June 30, 2010; Sheet 35 of 56

THIS SHEET OF ENGINEERING DRAWING IS THE PROPRIETARY PROPERTY OF COMPAL ELECTRONICS, INC. AND CONTAINS CONFIDENTIAL AND TRADE SECRET INFORMATION. THIS SHEET MAY NOT BE TRANSFERED FROM THE CUSTODY OF THE COMPETENT DIVISION OF R&D DEPARTMENT EXCEPT AS AUTHORIZED BY COMPAL ELECTRONICS, INC. NEITHER THIS SHEET NOR THE INFORMATION IT CONTAINS MAY BE USED BY OR DISCLOSED TO ANY THIRD PARTY WITHOUT PRIOR WRITTEN CONSENT OF COMPAL ELECTRONICS, INC.

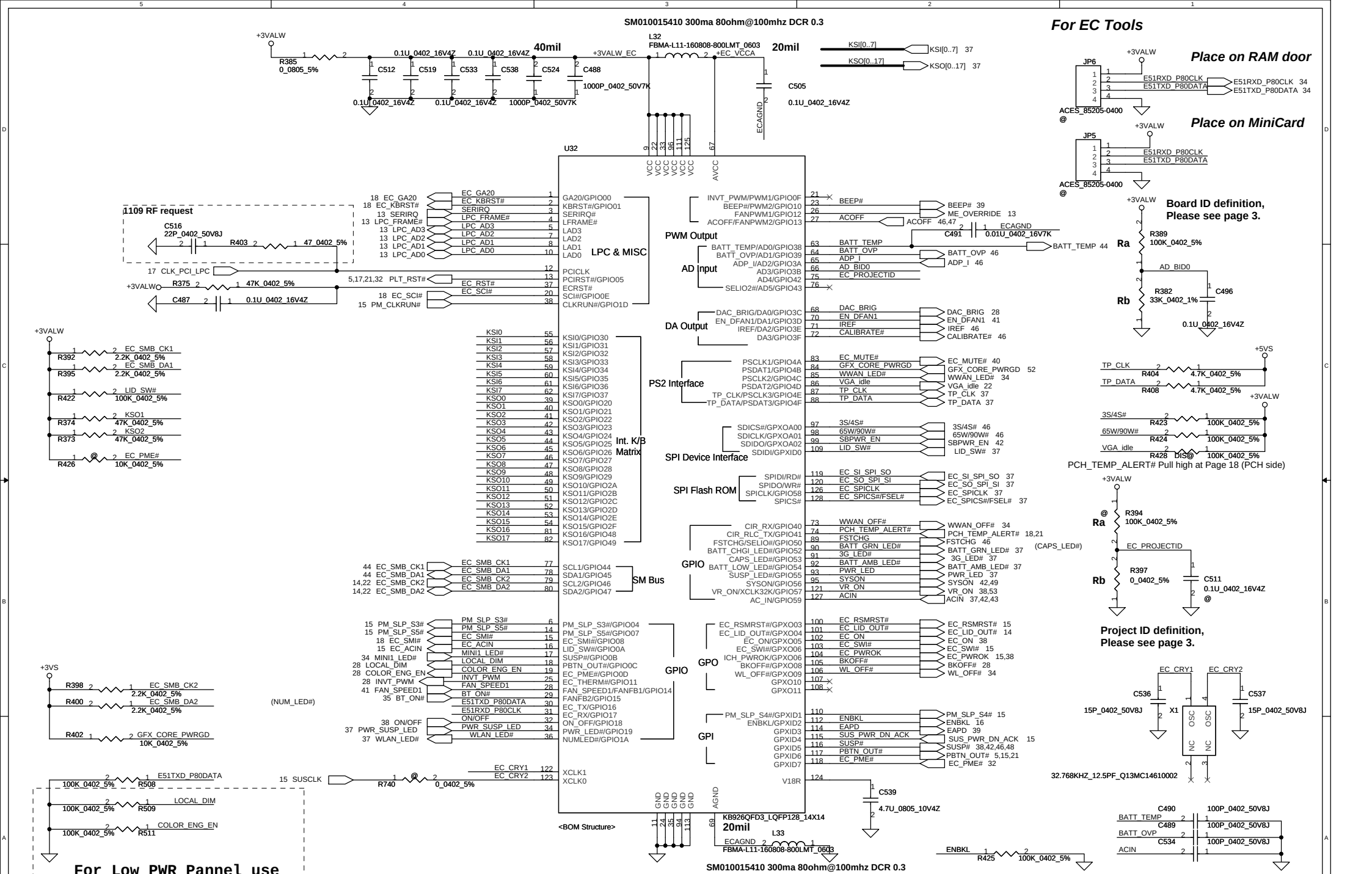

Security Classification	Compal Secret Data		
Issued Date	2008/08/10	Deciphered Date	2010/08/01

Compal Electronics, Inc.

Title: SCHEMATICS,MB A5893

Size: B | Document Number: 401869 | Rev: C

Date: Wednesday, June 30, 2010 | Sheet 36 of 56

THIS SHEET OF ENGINEERING DRAWING IS THE PROPRIETARY PROPERTY OF COMPAL ELECTRONICS, INC. AND CONTAINS CONFIDENTIAL AND TRADE SECRET INFORMATION. THIS SHEET MAY NOT BE TRANSFERED FROM THE CUSTODY OF THE COMPETENT DIVISION OF R&D DEPARTMENT EXCEPT AS AUTHORIZED BY COMPAL ELECTRONICS, INC. NEITHER THIS SHEET NOR THE INFORMATION IT CONTAINS MAY BE USED BY OR DISCLOSED TO ANY THIRD PARTY WITHOUT PRIOR WRITTEN CONSENT OF COMPAL ELECTRONICS, INC.

WWW.AliSaler.Com

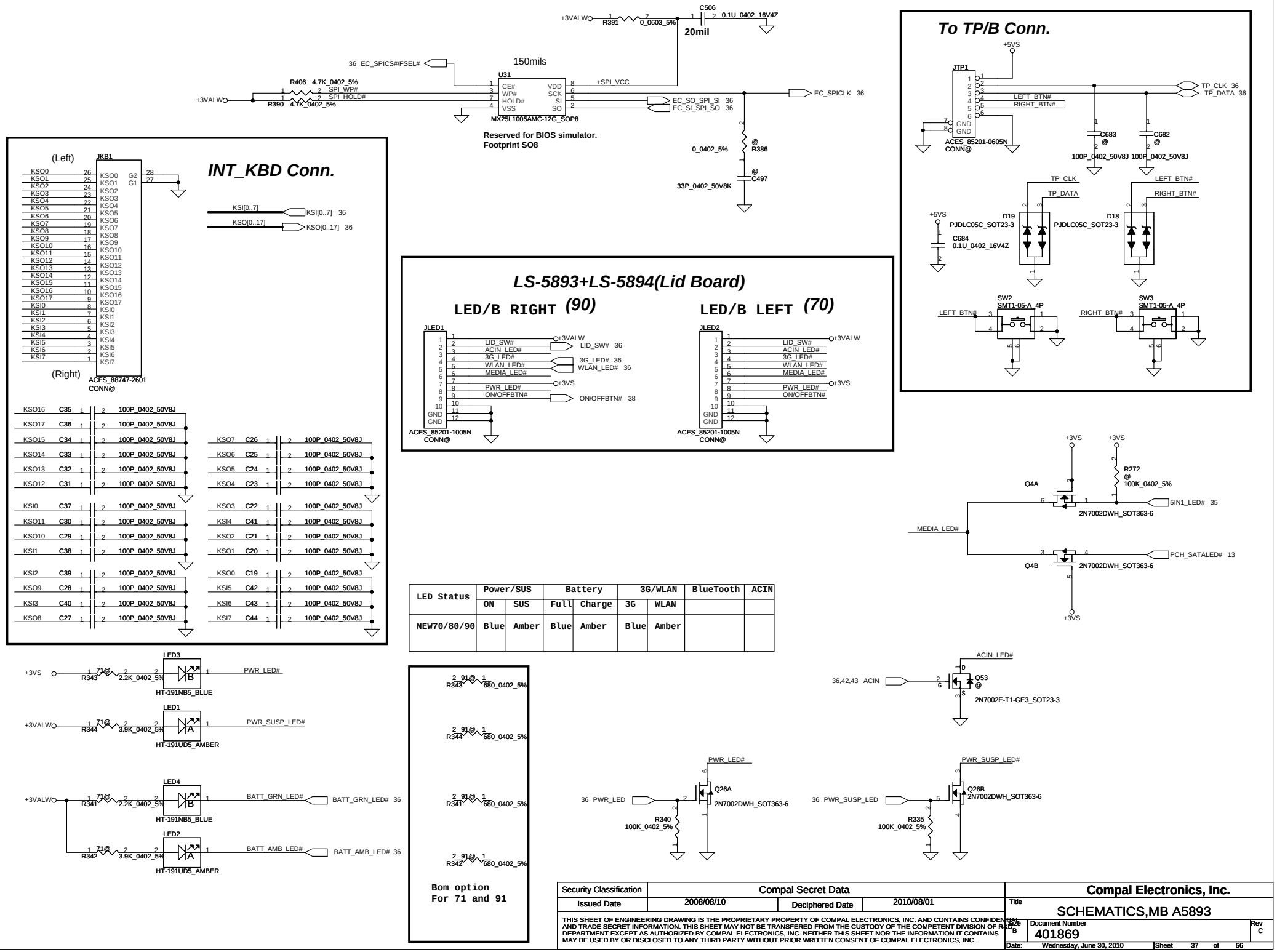

LED Status	Power/SUS		Battery		3G/WLAN		BlueTooth	ACIN
	ON	SUS	Full	Charge	3G	WLAN		
NEW70/80/90	Blue	Amber	Blue	Amber	Blue	Amber		

Security Classification	Compal Secret Data			Compal Electronics, Inc.
Issued Date	2008/08/10	Deciphered Date	2010/08/01	Title: SCHEMATICS,MB A5893
				Size: B; Document Number: 401869; Rev: C
				Date: Wednesday, June 30, 2010; Sheet 37 of 56

THIS SHEET OF ENGINEERING DRAWING IS THE PROPRIETARY PROPERTY OF COMPAL ELECTRONICS, INC. AND CONTAINS CONFIDENTIAL AND TRADE SECRET INFORMATION. THIS SHEET MAY NOT BE TRANSFERRED FROM THE CUSTODY OF THE COMPETENT DIVISION OF R&D DEPARTMENT EXCEPT AS AUTHORIZED BY COMPAL ELECTRONICS, INC. NEITHER THIS SHEET NOR THE INFORMATION IT CONTAINS MAY BE USED BY OR DISCLOSED TO ANY THIRD PARTY WITHOUT PRIOR WRITTEN CONSENT OF COMPAL ELECTRONICS, INC.

Power Button

ON/OFF switch

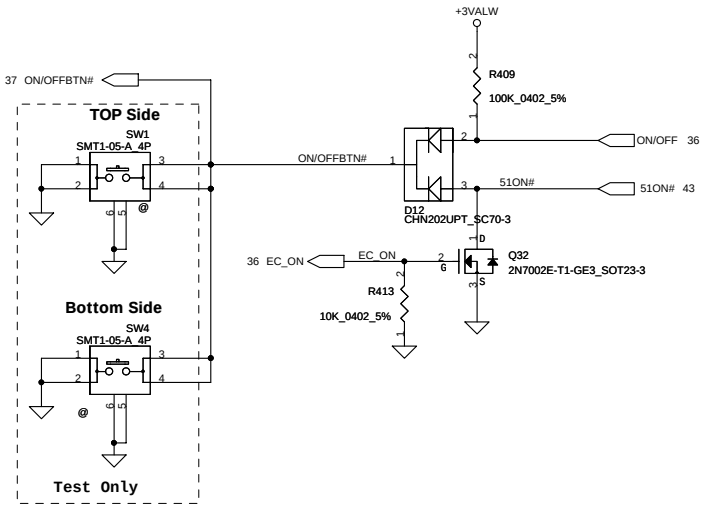

Power ON Circuit

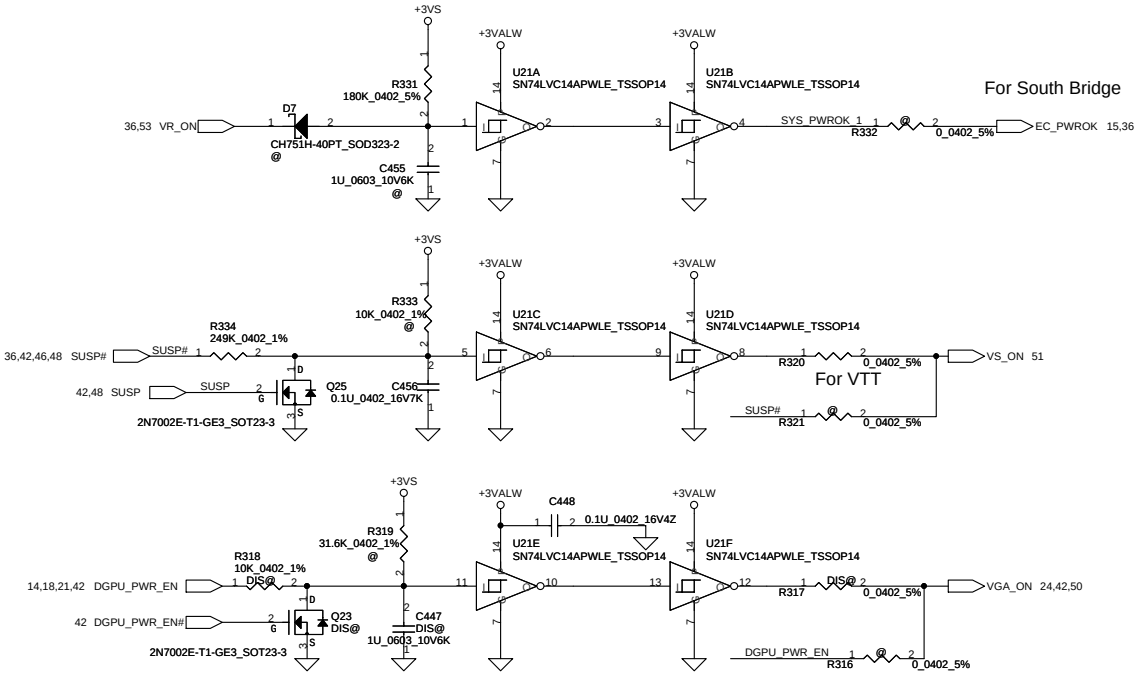

Security Classification	Compal Secret Data		
Issued Date	2008/08/10	Deciphered Date	2010/08/01

THIS SHEET OF ENGINEERING DRAWING IS THE PROPRIETARY PROPERTY OF COMPAL ELECTRONICS, INC. AND CONTAINS CONFIDENTIAL AND TRADE SECRET INFORMATION. THIS SHEET MAY NOT BE TRANSFERED FROM THE CUSTODY OF THE COMPETENT DIVISION OF R&D DEPARTMENT EXCEPT AS AUTHORIZED BY COMPAL ELECTRONICS, INC. NEITHER THIS SHEET NOR THE INFORMATION IT CONTAINS MAY BE USED BY OR DISCLOSED TO ANY THIRD PARTY WITHOUT PRIOR WRITTEN CONSENT OF COMPAL ELECTRONICS, INC.

Compal Electronics, Inc.

Title: SCHEMATICS,MB A5893

Size: B | Document Number: 401869 | Rev: C

Date: Wednesday, June 30, 2010 | Sheet 38 of 56

WWW.AliSaler.Com

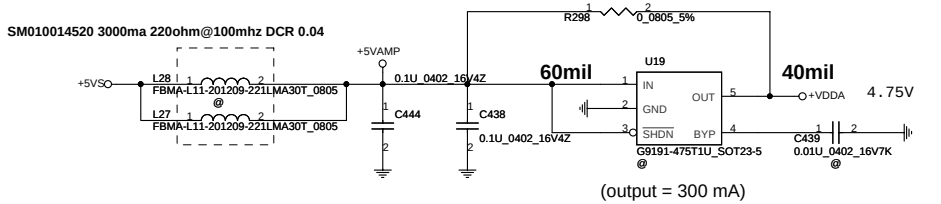

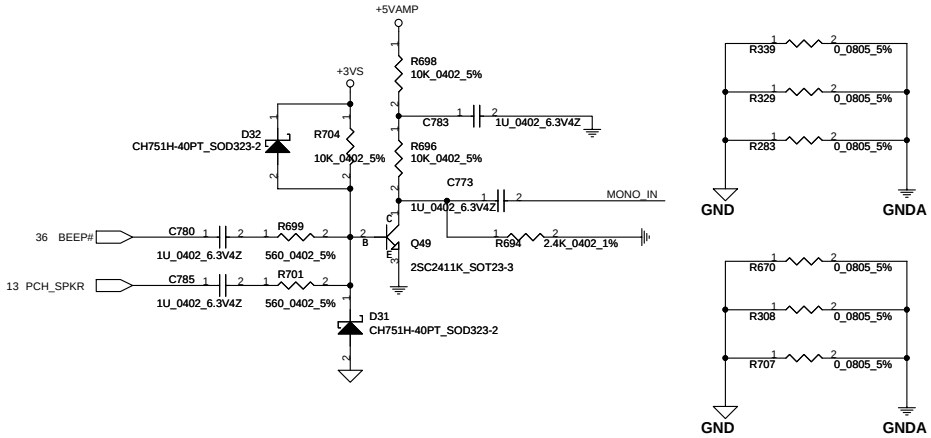

HD Audio Codec

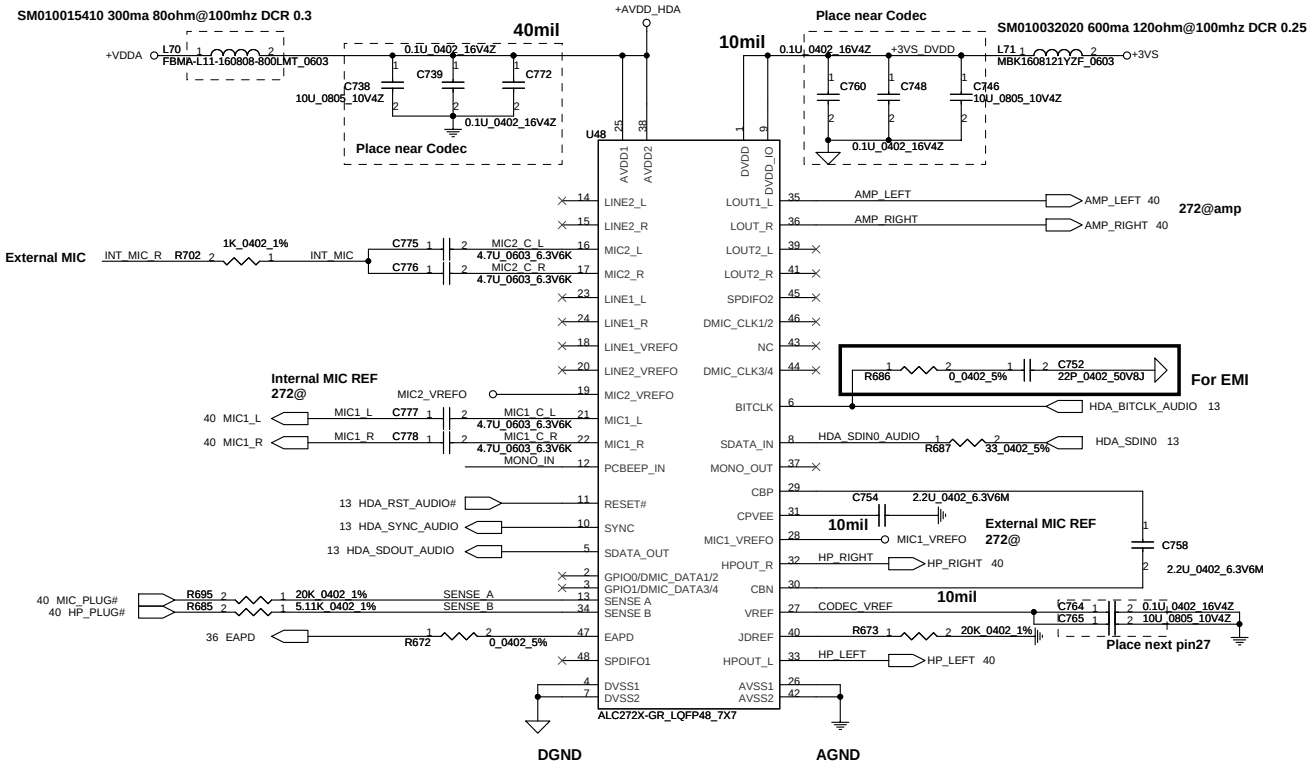

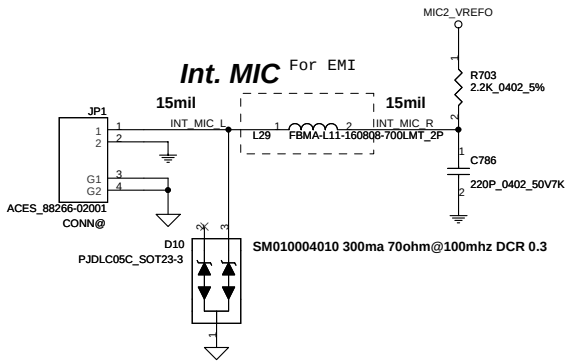

Security Classification	Compal Secret Data			Compal Electronics, Inc.
Issued Date	2008/08/10	Deciphered Date	2010/08/01	Title: SCHEMATICS,MB A5893
THIS SHEET OF ENGINEERING DRAWING IS THE PROPRIETARY PROPERTY OF COMPAL ELECTRONICS, INC. AND CONTAINS CONFIDENTIAL AND TRADE SECRET INFORMATION. THIS SHEET MAY NOT BE TRANSFERED FROM THE CUSTODY OF THE COMPETENT DIVISION OF R&D DEPARTMENT EXCEPT AS AUTHORIZED BY COMPAL ELECTRONICS, INC. NEITHER THIS SHEET NOR THE INFORMATION IT CONTAINS MAY BE USED BY OR DISCLOSED TO ANY THIRD PARTY WITHOUT PRIOR WRITTEN CONSENT OF COMPAL ELECTRONICS, INC.				Size: Custom / Document Number: 401869 / Rev: C
				Date: Wednesday, June 30, 2010 / Sheet 39 of 56

GAIN0	GAIN1	AV(inv)	Ri
0	0	6dB	90k
0	1	10dB	70k
1	0	15.6dB	45k
1	1	21.6dB	25k

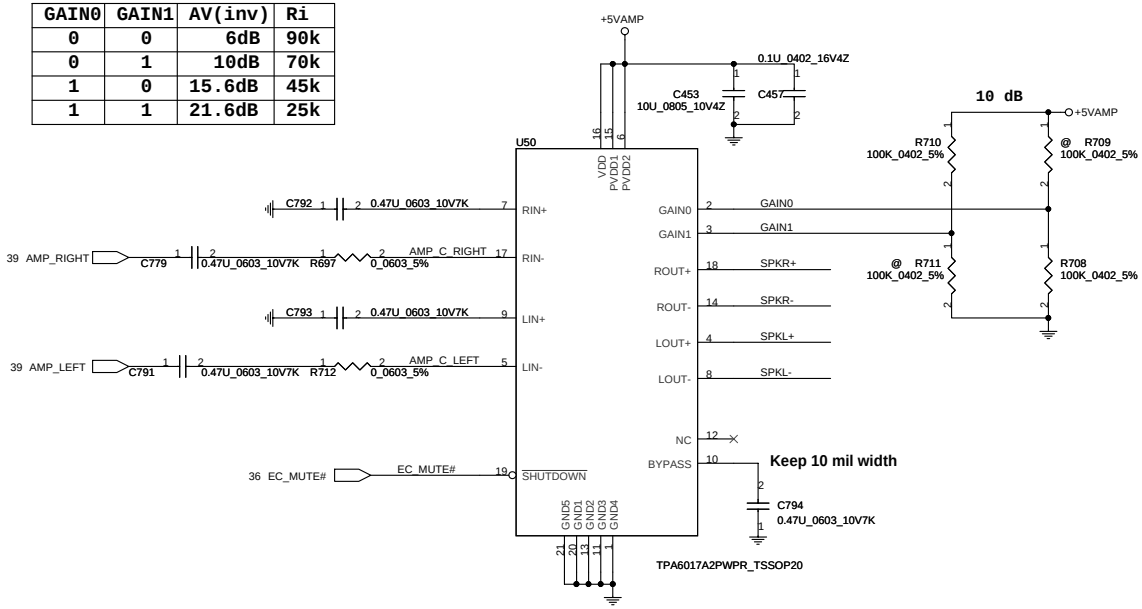

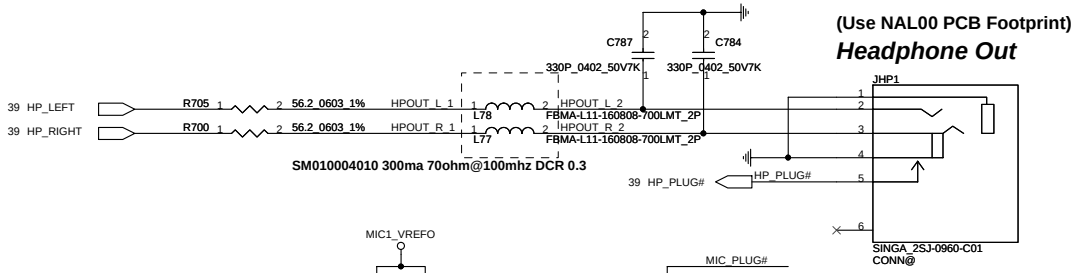

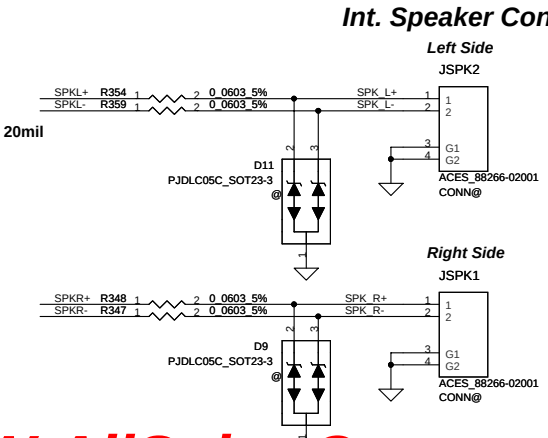

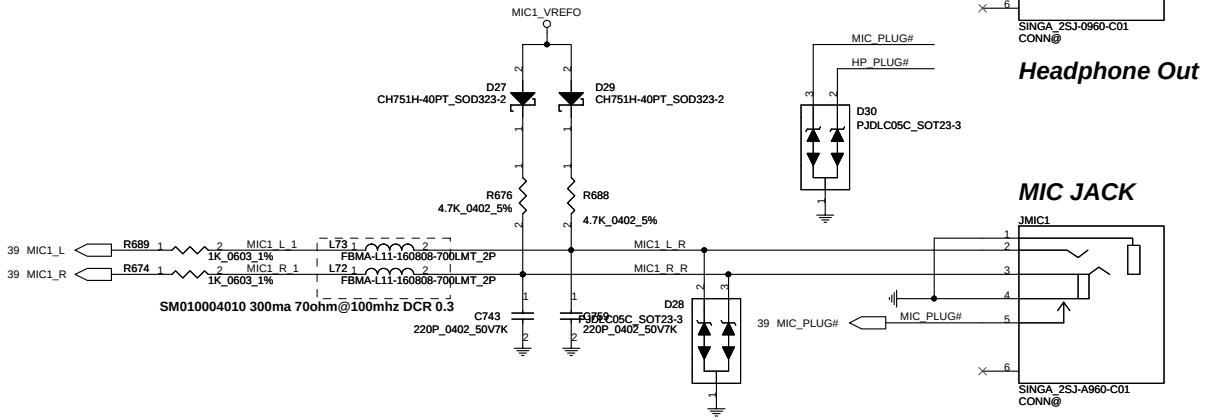

Security Classification	Compal Secret Data			Compal Electronics, Inc.
Issued Date	2008/08/10	Deciphered Date	2010/08/01	Title: SCHEMATICS,MB A5893
THIS SHEET OF ENGINEERING DRAWING IS THE PROPRIETARY PROPERTY OF COMPAL ELECTRONICS, INC. AND CONTAINS CONFIDENTIAL AND TRADE SECRET INFORMATION. THIS SHEET MAY NOT BE TRANSFERED FROM THE CUSTODY OF THE COMPETENT DIVISION OF R&D DEPARTMENT EXCEPT AS AUTHORIZED BY COMPAL ELECTRONICS, INC. NEITHER THIS SHEET NOR THE INFORMATION IT CONTAINS MAY BE USED BY OR DISCLOSED TO ANY THIRD PARTY WITHOUT PRIOR WRITTEN CONSENT OF COMPAL ELECTRONICS, INC.				Size: Custom / Document Number: 401869 / Rev: C
				Date: Wednesday, June 30, 2010 / Sheet 40 of 56

WWW.AliSaler.Com

FAN1 Conn

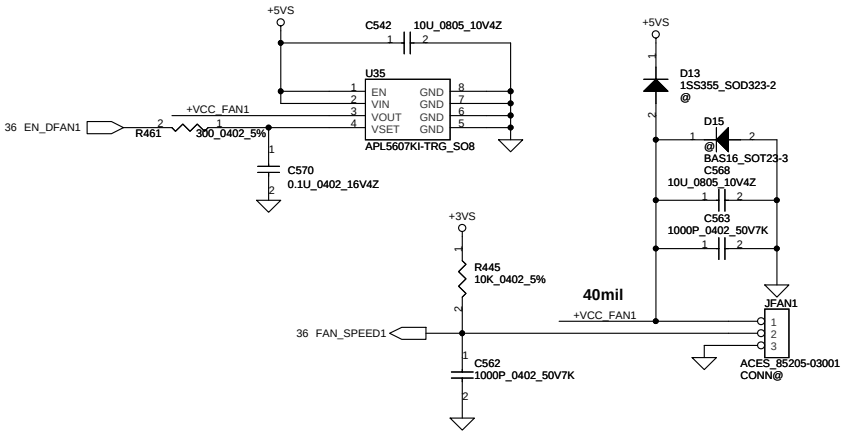

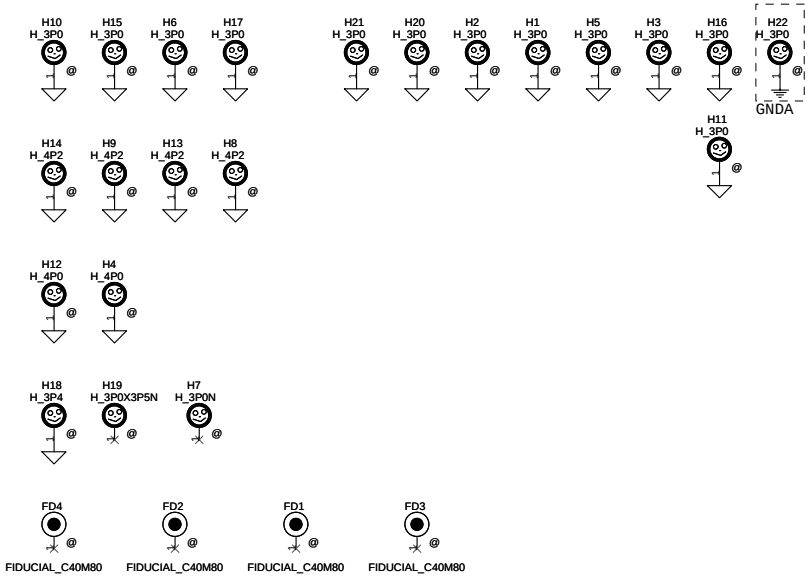

Security Classification	Compal Secret Data			Compal Electronics, Inc.
Issued Date	2008/08/10	Deciphered Date	2010/08/01	Title: SCHEMATICS,MB A5893
				Size: B / Document Number: 401869 / Rev: C
				Date: Wednesday, June 30, 2010 / Sheet 41 of 56

THIS SHEET OF ENGINEERING DRAWING IS THE PROPRIETARY PROPERTY OF COMPAL ELECTRONICS, INC. AND CONTAINS CONFIDENTIAL AND TRADE SECRET INFORMATION. THIS SHEET MAY NOT BE TRANSFERED FROM THE CUSTODY OF THE COMPETENT DIVISION OF R&D DEPARTMENT EXCEPT AS AUTHORIZED BY COMPAL ELECTRONICS, INC. NEITHER THIS SHEET NOR THE INFORMATION IT CONTAINS MAY BE USED BY OR DISCLOSED TO ANY THIRD PARTY WITHOUT PRIOR WRITTEN CONSENT OF COMPAL ELECTRONICS, INC.

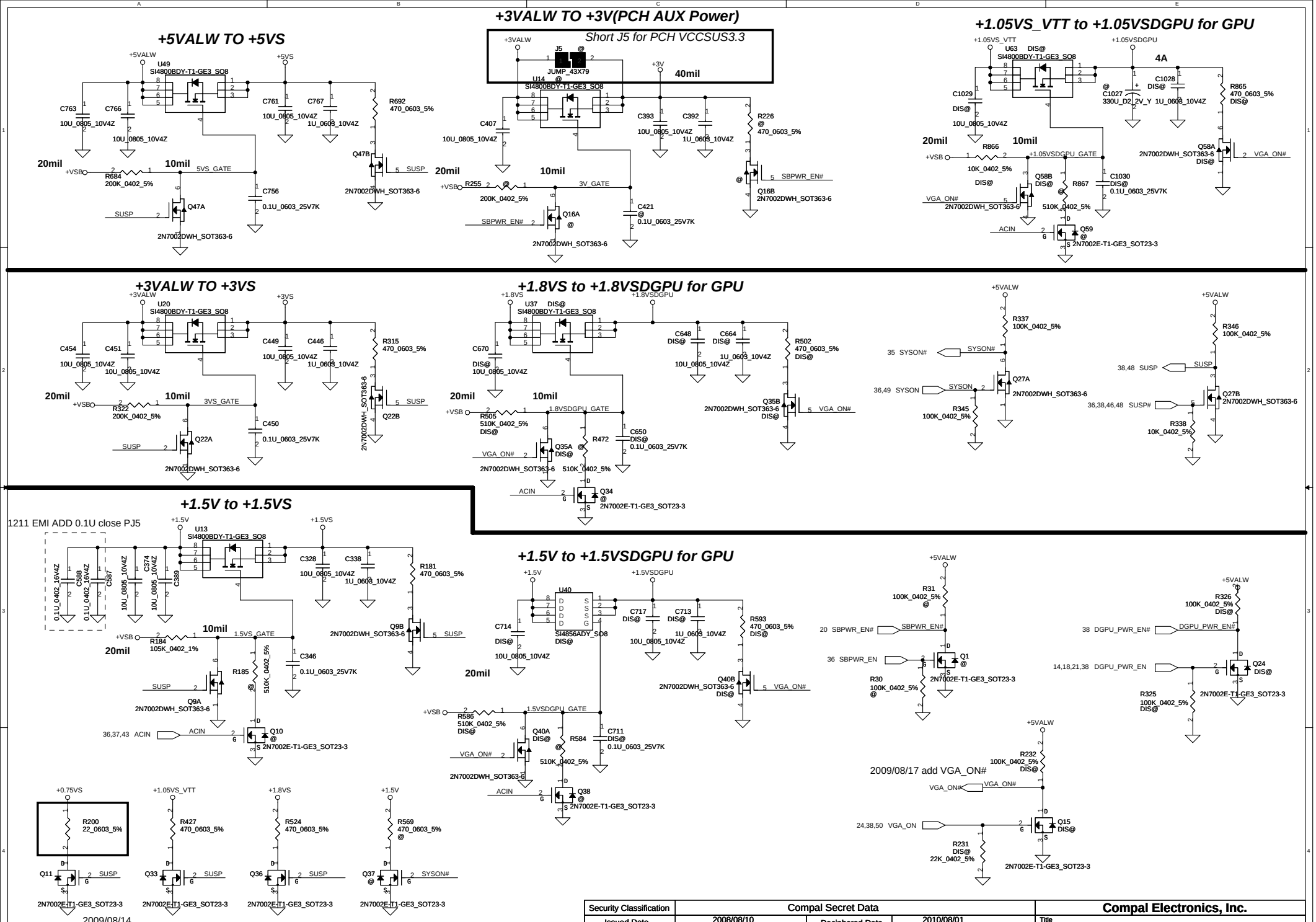

WWW.AliSaler.Com

Security Classification	Compal Secret Data		
Issued Date	2008/08/10	Deciphered Date	2010/08/01

THIS SHEET OF ENGINEERING DRAWING IS THE PROPRIETARY PROPERTY OF COMPAL ELECTRONICS, INC. AND CONTAINS CONFIDENTIAL AND TRADE SECRET INFORMATION. THIS SHEET MAY NOT BE TRANSFERRED FROM THE CUSTODY OF THE COMPETENT DIVISION OF R&D DEPARTMENT EXCEPT AS AUTHORIZED BY COMPAL ELECTRONICS, INC. NEITHER THIS SHEET NOR THE INFORMATION IT CONTAINS MAY BE USED BY OR DISCLOSED TO ANY THIRD PARTY WITHOUT PRIOR WRITTEN CONSENT OF COMPAL ELECTRONICS, INC.

Compal Electronics, Inc.

Title: SCHEMATICS,MB A5893

Size: B | Document Number: 401869 | Rev: C

Date: Wednesday, June 30, 2010 | Sheet 42 of 56

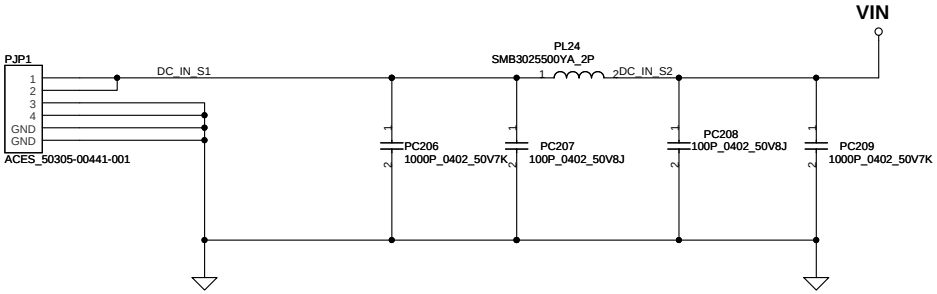

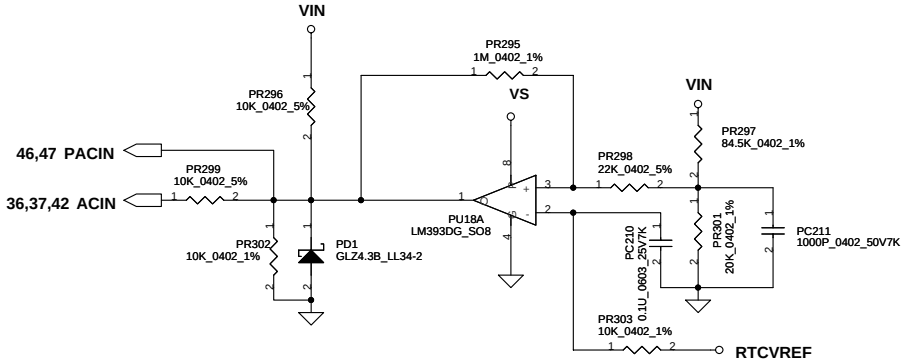

Vin Dectector

	Min.	Typ	Max.
H-->L	16.976V	17.525V	17.728V
L-->H	17.430V	17.901V	18.384V

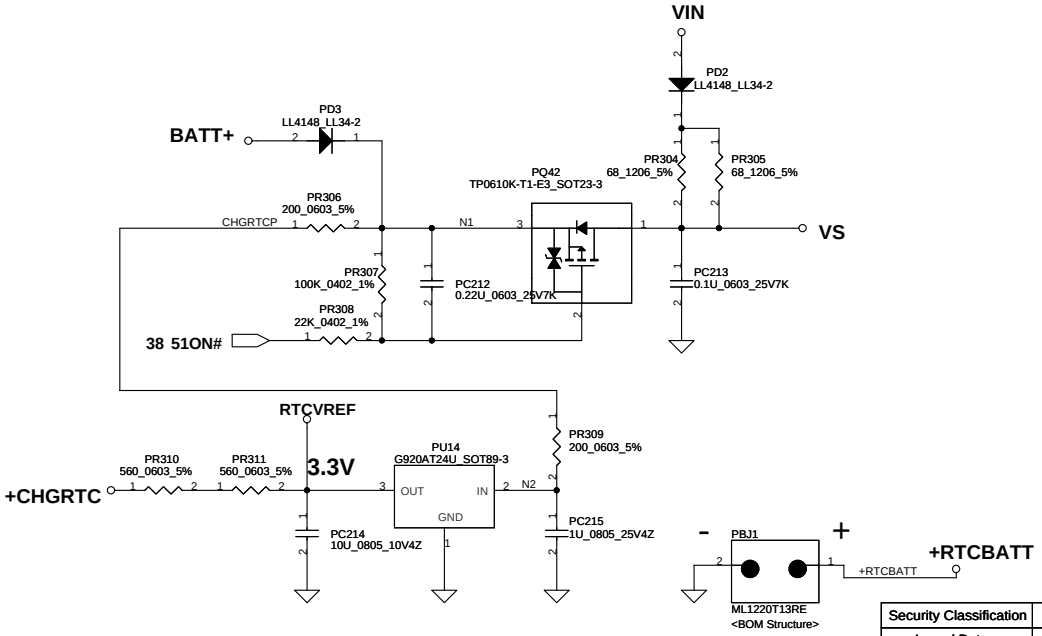

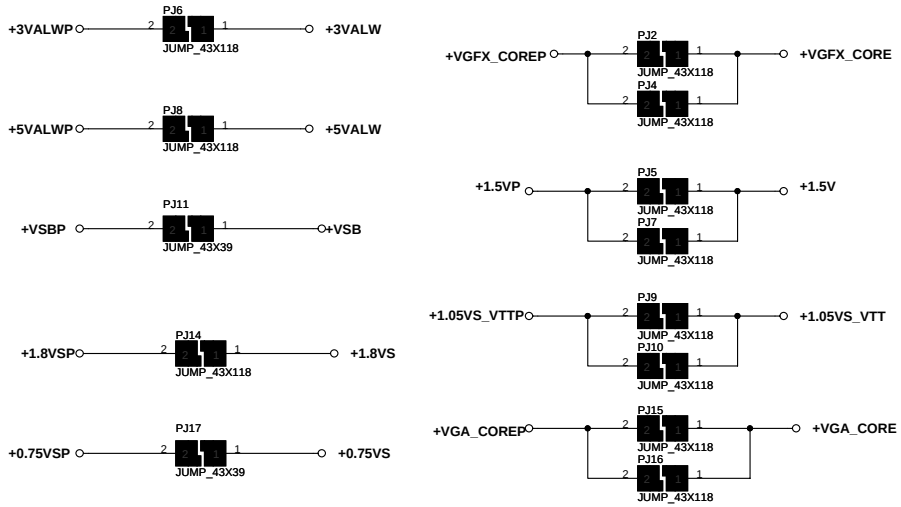

Security Classification	Compal Secret Data		
Issued Date	2008/08/10	Deciphered Date	2010/08/01

THIS SHEET OF ENGINEERING DRAWING IS THE PROPRIETARY PROPERTY OF COMPAL ELECTRONICS, INC. AND CONTAINS CONFIDENTIAL AND TRADE SECRET INFORMATION. THIS SHEET MAY NOT BE TRANSFERED FROM THE CUSTODY OF THE COMPETENT DIVISION OF R&D DEPARTMENT EXCEPT AS AUTHORIZED BY COMPAL ELECTRONICS, INC. NEITHER THIS SHEET NOR THE INFORMATION IT CONTAINS MAY BE USED BY OR DISCLOSED TO ANY THIRD PARTY WITHOUT PRIOR WRITTEN CONSENT OF COMPAL ELECTRONICS, INC.

Compal Electronics, Inc.

Title: SCHEMATICS,MB A5893

Size: Custom | Document Number: 401869 | Rev: C

Date: Wednesday, June 30, 2010 | Sheet 43 of 56

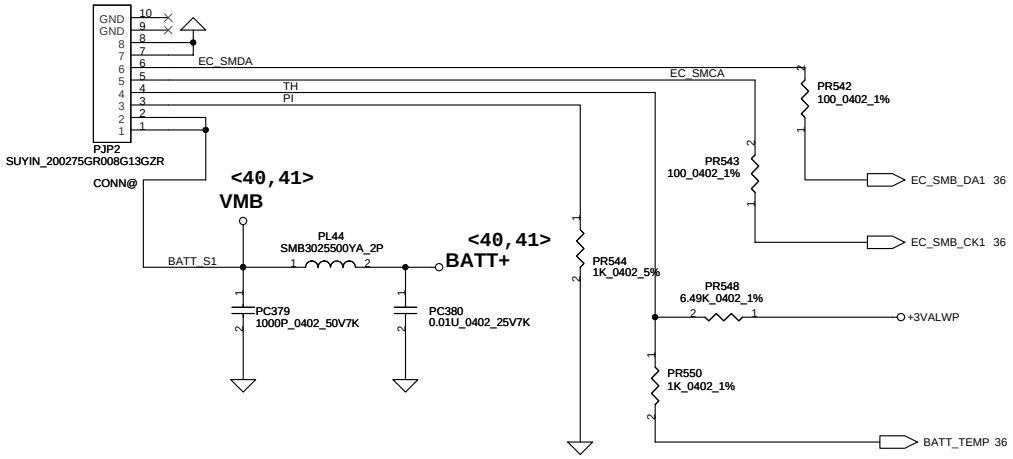

PH1 under CPU botten side :
CPU thermal protection at 92 degree C

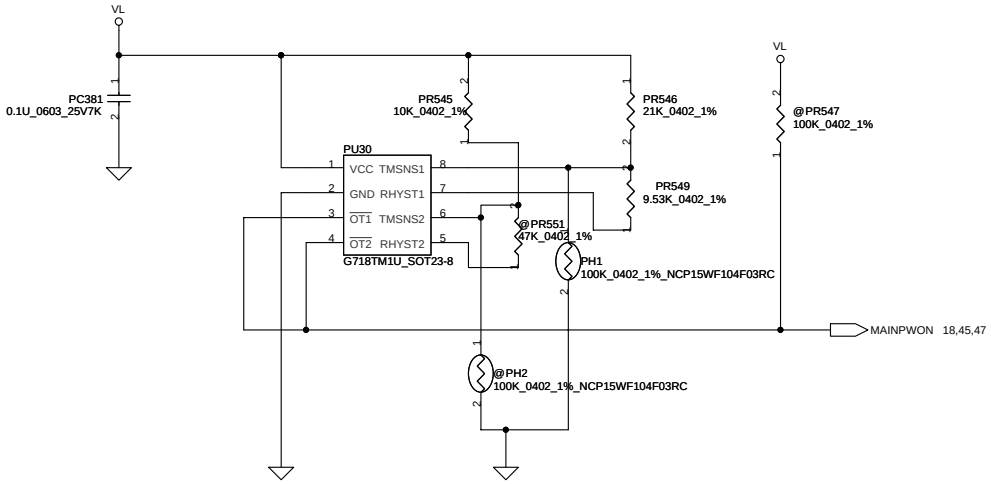

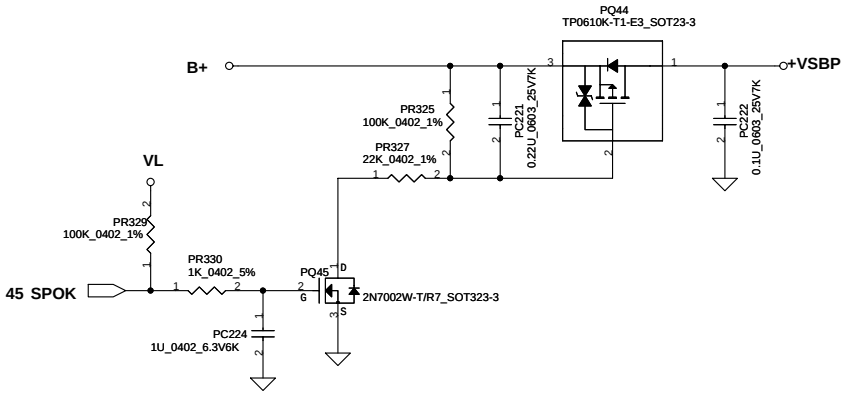

Security Classification	Compal Secret Data			Compal Electronics, Inc.
Issued Date	2008/08/10	Deciphered Date	2010/08/01	Title: SCHEMATICS,MB A5893
THIS SHEET OF ENGINEERING DRAWING IS THE PROPRIETARY PROPERTY OF COMPAL ELECTRONICS, INC. AND CONTAINS CONFIDENTIAL AND TRADE SECRET INFORMATION. THIS SHEET MAY NOT BE TRANSFERED FROM THE CUSTODY OF THE COMPETENT DIVISION OF R&D DEPARTMENT EXCEPT AS AUTHORIZED BY COMPAL ELECTRONICS, INC. NEITHER THIS SHEET NOR THE INFORMATION IT CONTAINS MAY BE USED BY OR DISCLOSED TO ANY THIRD PARTY WITHOUT PRIOR WRITTEN CONSENT OF COMPAL ELECTRONICS, INC.				Size: Custom; Document Number: 401869; Rev: C
				Date: Wednesday, June 30, 2010; Sheet 44 of 56

WWW.AliSaler.Com

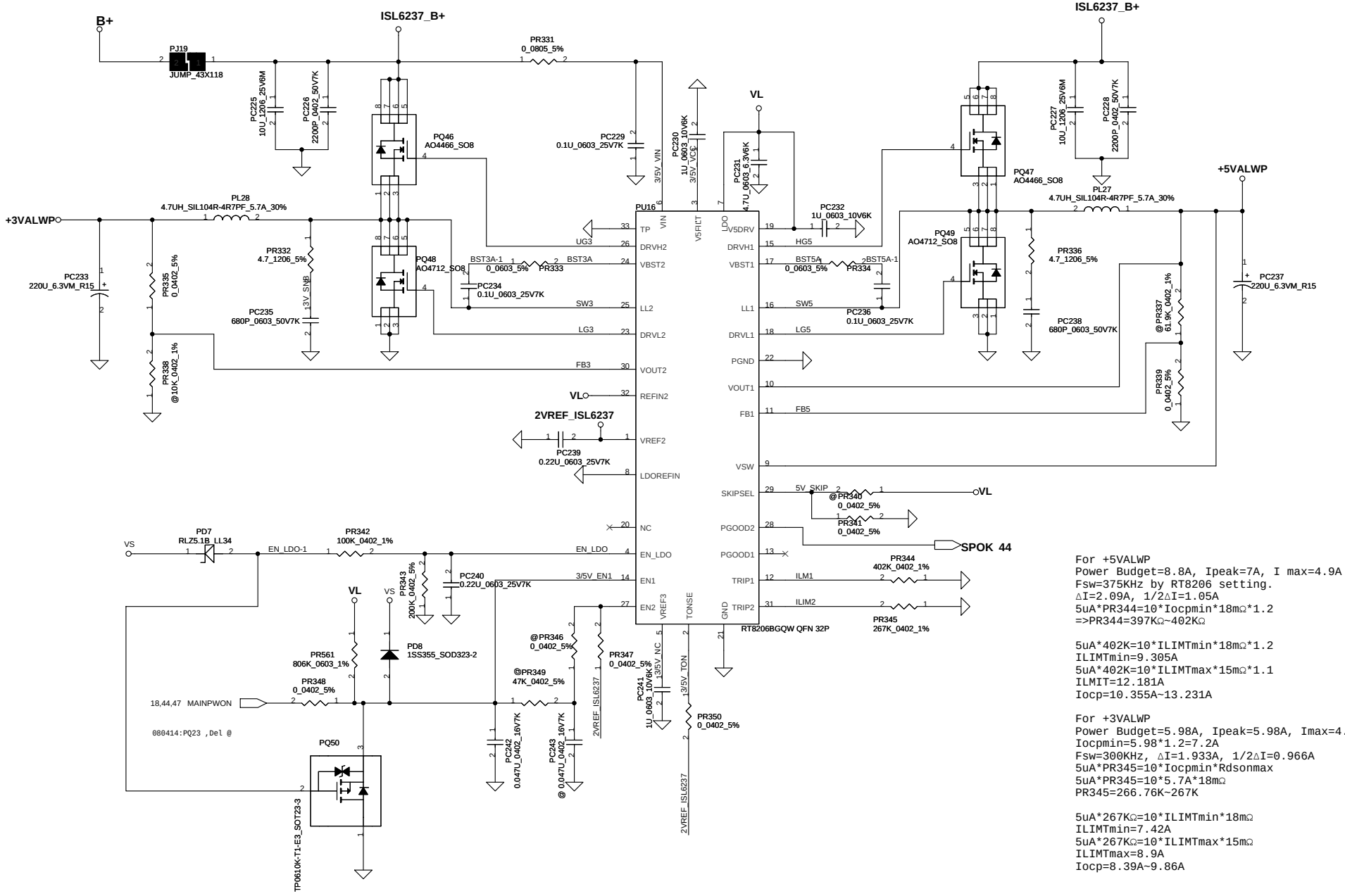

For +5VALWP
Power Budget=8.8A, Ipeak=7A, I max=4.9A
Fsw=375KHz by RT8206 setting.
ΔI=2.09A, 1/2ΔI=1.05A
5uA*PR344=10*Iocpmin*18mΩ*1.2
=>PR344=397KΩ~402KΩ

5uA*402K=10*ILIMTmin*18mΩ*1.2
ILIMTmin=9.305A
5uA*402K=10*ILIMTmax*15mΩ*1.1
ILMIT=12.181A
Iocp=10.355A~13.231A

For +3VALWP
Power Budget=5.98A, Ipeak=5.98A, Imax=4.2A
Iocpmin=5.98*1.2=7.2A
Fsw=300KHz, ΔI=1.933A, 1/2ΔI=0.966A
5uA*PR345=10*Iocpmin*Rdsonmax
5uA*PR345=10*5.7A*18mΩ
PR345=266.76K~267K

5uA*267KΩ=10*ILIMTmin*18mΩ
ILIMTmin=7.42A
5uA*267KΩ=10*ILIMTmax*15mΩ
ILIMTmax=8.9A
Iocp=8.39A~9.86A

Security Classification	Compal Secret Data		
Issued Date	2008/08/10	Deciphered Date	2010/08/01

THIS SHEET OF ENGINEERING DRAWING IS THE PROPRIETARY PROPERTY OF COMPAL ELECTRONICS, INC. AND CONTAINS CONFIDENTIAL AND TRADE SECRET INFORMATION. THIS SHEET MAY NOT BE TRANSFERED FROM THE CUSTODY OF THE COMPETENT DIVISION OF R&D DEPARTMENT EXCEPT AS AUTHORIZED BY COMPAL ELECTRONICS, INC. NEITHER THIS SHEET NOR THE INFORMATION IT CONTAINS MAY BE USED BY OR DISCLOSED TO ANY THIRD PARTY WITHOUT PRIOR WRITTEN CONSENT OF COMPAL ELECTRONICS, INC.

Compal Electronics, Inc.

Title: SCHEMATICS,MB A5893

Size: Custom | Document Number: 401869 | Rev: C

Date: Wednesday, June 30, 2010 | Sheet 45 of 56

Iada=0~4.74A(90W/19V=4.736A)
Iada=0~3.42A(90W/19V=3.421A)

ADP_I = 19.9*Iadapter*Rsense

CP = 85%*Iada ; CP = 4.07A
CP = 85%*Iada ; CP = 2.91A

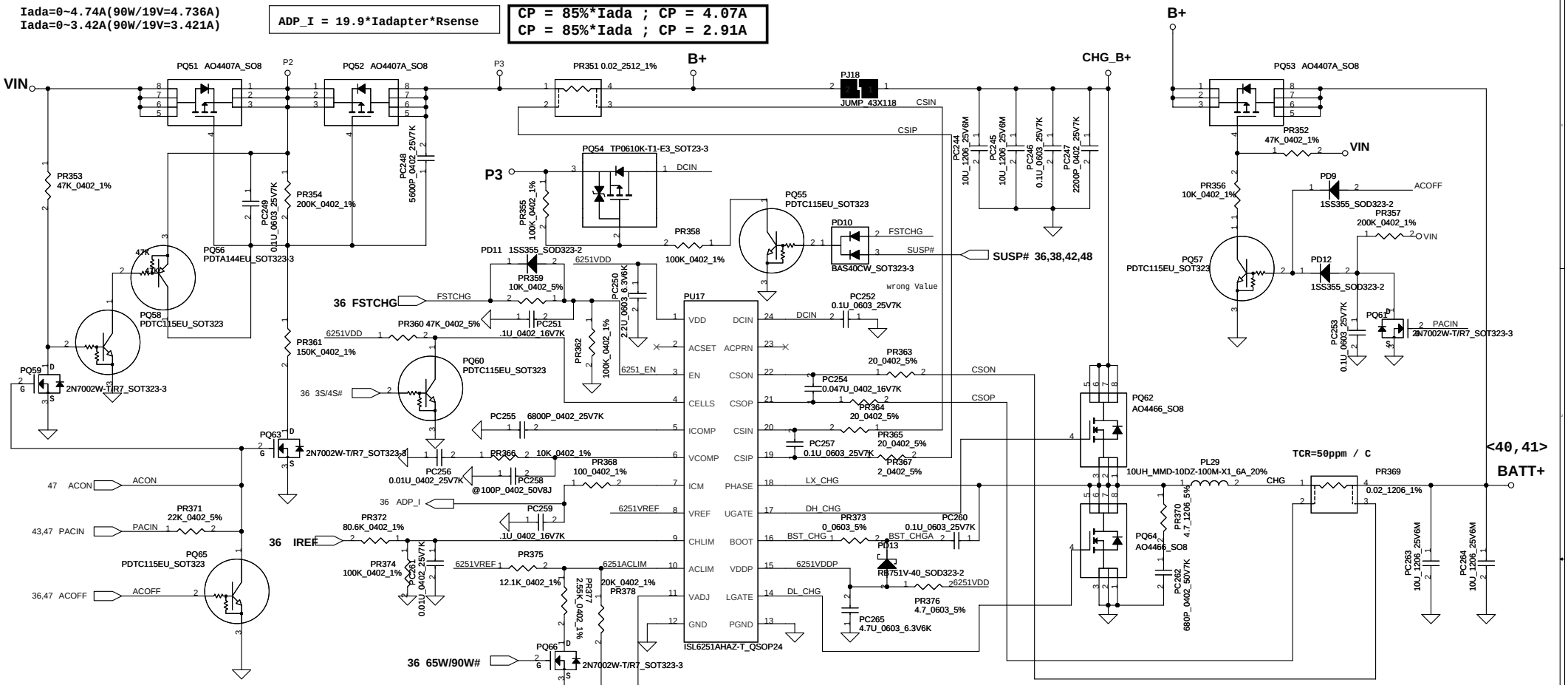

CP mode
Iinput=(1/0.02)(0.05*Vaclm/2.39+0.05)
where Vaclm=1.502V, Iinput=4.07A

CC=0.6~4.48A
Iref=0.7224*Ichanrge
kI=0.7224
IREF=0.43V~3.24V

Ki
Vchlim=Iref*(PR374/(PR372+PR374))
=Iref*(100K/(80.6K+100K))
=Iref*0.5537
Ichanrge=(165mV/PR369)*(Vchlim/3.3V)
=(165m/20m)*(1/3.3V)*Iref*0.5537
=1.3842*Iref
Iref=0.7224*Ichanrge =>Ki=0.7224

Kv
Rinternal ic=514K Rec=3K R1=PR379=15.4K R2=PR381=31.6K
R=514K//31.6K//(15.4K+3k)=11.372K
r=514K//514K//31.6K=28.14K
Vcell=0.175*Vadj+3.99v
4.2V=0.175*Vadj+3.99V =>Vadj=1.2V
Vadj=Vref*(R/(R+514K))+CALIBRATE*(r/(r=514K))
1.1483=CALIBRATE*0.6046 =>CALIBRATE=1.899
1.899=(4.2-(Vcell+A*0.175))*Kv=(4.2-(4.2+A*0.175))*Kv
A=Vref*(R/(R+514K))=0.052
Kv=9.451

LI-3S :13.5V----BATT-OVP=1.5012V
BATT-OVP=0.1112*VMB
Per cell=4.5V

BATT Type	Charging Voltage (0x15)	CV mode
Normal 3S LI-ON Cells	12600mV	12.60V

Security Classification	Compal Secret Data		
Issued Date	2008/08/10	Deciphered Date	2010/08/01

THIS SHEET OF ENGINEERING DRAWING IS THE PROPRIETARY PROPERTY OF COMPAL ELECTRONICS, INC. AND CONTAINS CONFIDENTIAL AND TRADE SECRET INFORMATION. THIS SHEET MAY NOT BE TRANSFERED FROM THE CUSTODY OF THE COMPETENT DIVISION OF R&D DEPARTMENT EXCEPT AS AUTHORIZED BY COMPAL ELECTRONICS, INC. NEITHER THIS SHEET NOR THE INFORMATION IT CONTAINS MAY BE USED BY OR DISCLOSED TO ANY THIRD PARTY WITHOUT PRIOR WRITTEN CONSENT OF COMPAL ELECTRONICS, INC.

Compal Electronics, Inc.

Title: SCHEMATICS,MB A5893

Size: Custom | Document Number: 401869 | Rev: C

Date: Wednesday, June 30, 2010 | Sheet 46 of 56

WWW.AliSaler.Com

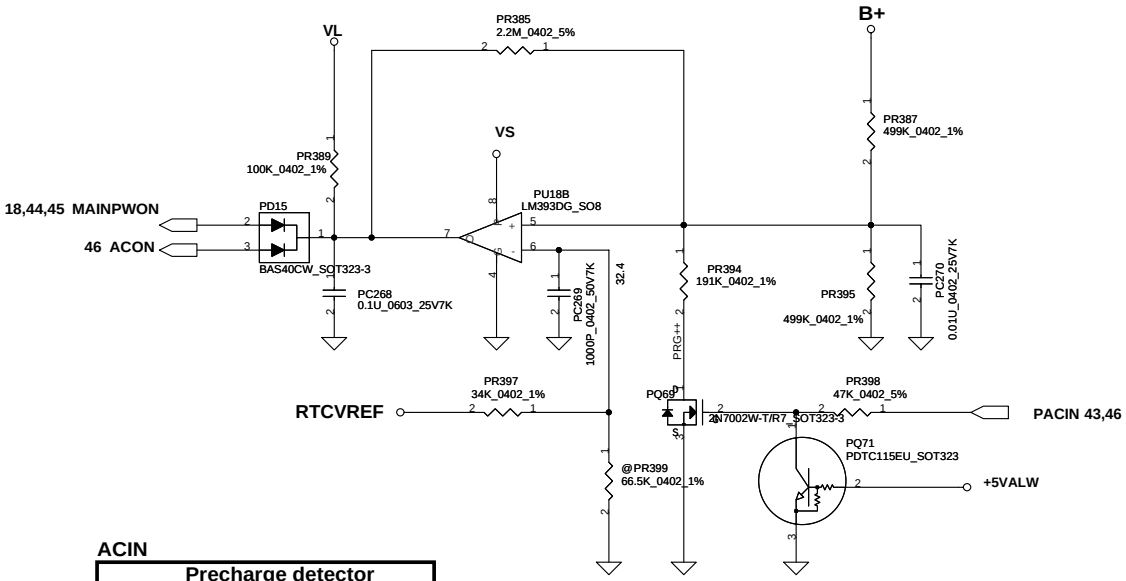

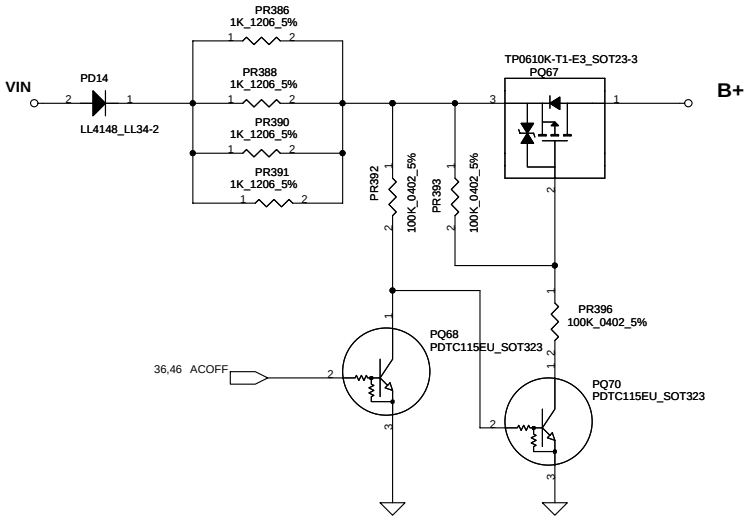

ACIN

Precharge detector			
	Min.	typ.	Max
H-->L	14.589V	14.84V	15.243V
L-->H	15.562V	15.97V	16.388V

BATT ONLY

Precharge detector			
	Min.	typ.	Max
H-->L	6.138V	6.214V	6.359V
L-->H	7.196V	7.349V	7.505V

Security Classification	Compal Secret Data		
Issued Date	2008/08/10	Deciphered Date	2010/08/01

THIS SHEET OF ENGINEERING DRAWING IS THE PROPRIETARY PROPERTY OF COMPAL ELECTRONICS, INC. AND CONTAINS CONFIDENTIAL AND TRADE SECRET INFORMATION. THIS SHEET MAY NOT BE TRANSFERED FROM THE CUSTODY OF THE COMPETENT DIVISION OF R&D DEPARTMENT EXCEPT AS AUTHORIZED BY COMPAL ELECTRONICS, INC. NEITHER THIS SHEET NOR THE INFORMATION IT CONTAINS MAY BE USED BY OR DISCLOSED TO ANY THIRD PARTY WITHOUT PRIOR WRITTEN CONSENT OF COMPAL ELECTRONICS, INC.

Compal Electronics, Inc.

Title: SCHEMATICS,MB A5893

Size: Custom | Document Number: 401869 | Rev: C

Date: Wednesday, June 30, 2010 | Sheet 47 of 56

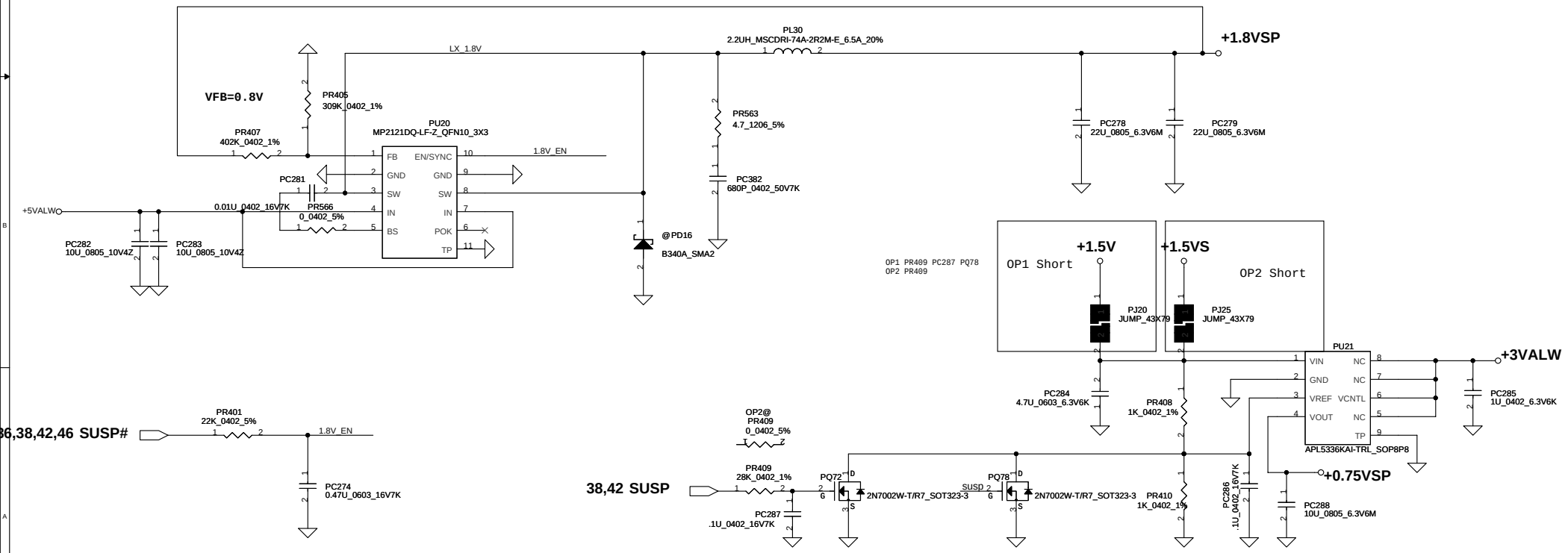

Security Classification	Compal Secret Data		
Issued Date	2008/08/10	Deciphered Date	2010/08/01

THIS SHEET OF ENGINEERING DRAWING IS THE PROPRIETARY PROPERTY OF COMPAL ELECTRONICS, INC. AND CONTAINS CONFIDENTIAL AND TRADE SECRET INFORMATION. THIS SHEET MAY NOT BE TRANSFERED FROM THE CUSTODY OF THE COMPETENT DIVISION OF R&D DEPARTMENT EXCEPT AS AUTHORIZED BY COMPAL ELECTRONICS, INC. NEITHER THIS SHEET NOR THE INFORMATION IT CONTAINS MAY BE USED BY OR DISCLOSED TO ANY THIRD PARTY WITHOUT PRIOR WRITTEN CONSENT OF COMPAL ELECTRONICS, INC.

Compal Electronics, Inc.

Title: SCHEMATICS,MB A5893

Size: Custom | Document Number: 401869 | Rev: C

Date: Wednesday, June 30, 2010 | Sheet 48 of 56

WWW.AliSaler.Com

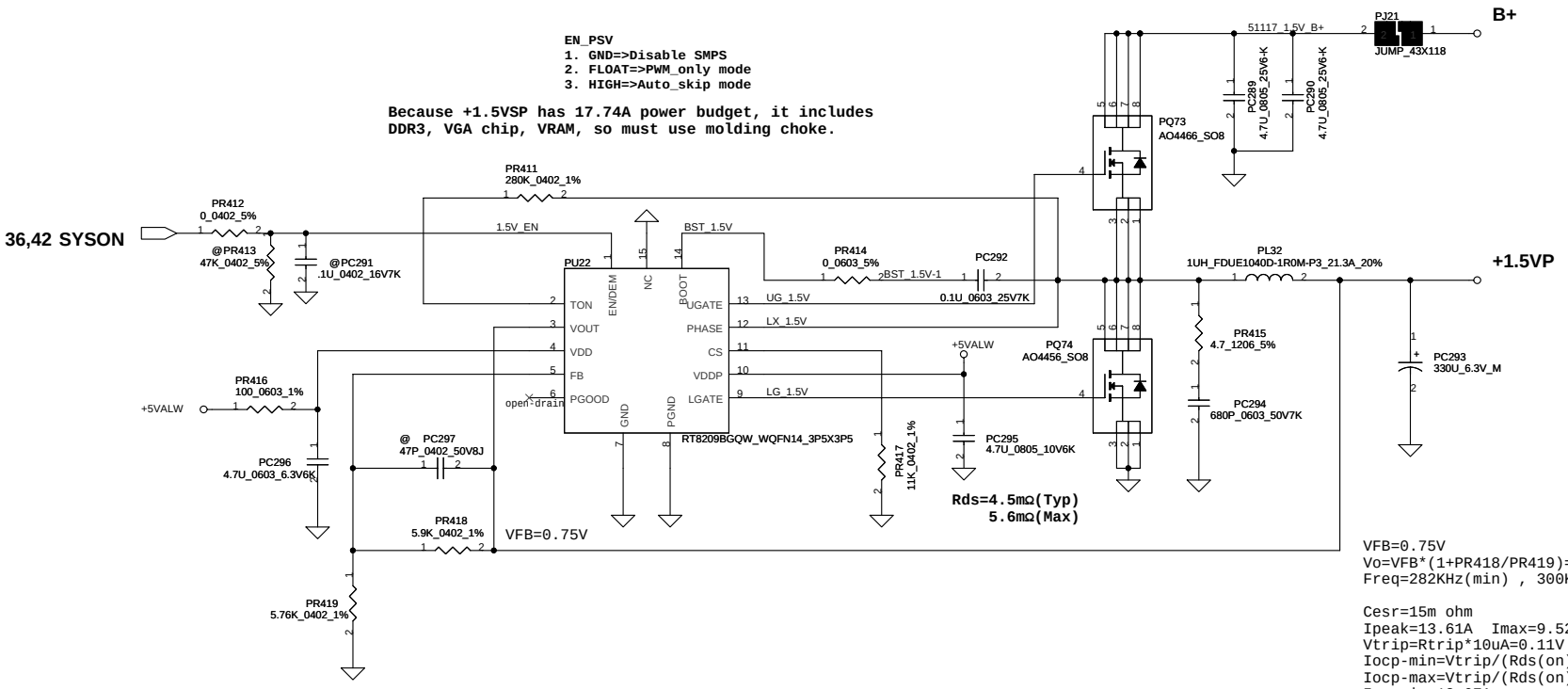

VFB=0.75V
Vo=VFB*(1+PR418/PR419)=1.52V
Freq=282KHz(min) , 300KHz(typ)

Cesr=15m ohm
Ipeak=13.61A Imax=9.527A
Vtrip=Rtrip*10uA=0.11V
Iocp-min=Vtrip/(Rds(on)(max)*1.2)+Delta I / 2= 18.67A
Iocp-max=Vtrip/(Rds(on)(typ)*1.2)+Delta I / 2=22.67A
Iocpmin=18.67A
△I=((19-1.5)*(1.5/19))/(L*Freq)=4.605A
1/2△I=2.3A

Iocp=18.67A~22.67A

Security Classification	Compal Secret Data			Compal Electronics, Inc.
Issued Date	2008/08/10	Deciphered Date	2010/08/01	Title: SCHEMATICS,MB A5893
THIS SHEET OF ENGINEERING DRAWING IS THE PROPRIETARY PROPERTY OF COMPAL ELECTRONICS, INC. AND CONTAINS CONFIDENTIAL AND TRADE SECRET INFORMATION. THIS SHEET MAY NOT BE TRANSFERED FROM THE CUSTODY OF THE COMPETENT DIVISION OF R&D DEPARTMENT EXCEPT AS AUTHORIZED BY COMPAL ELECTRONICS, INC. NEITHER THIS SHEET NOR THE INFORMATION IT CONTAINS MAY BE USED BY OR DISCLOSED TO ANY THIRD PARTY WITHOUT PRIOR WRITTEN CONSENT OF COMPAL ELECTRONICS, INC.				Size: Custom; Document Number: 401869; Rev: C
				Date: Wednesday, June 30, 2010; Sheet 49 of 56

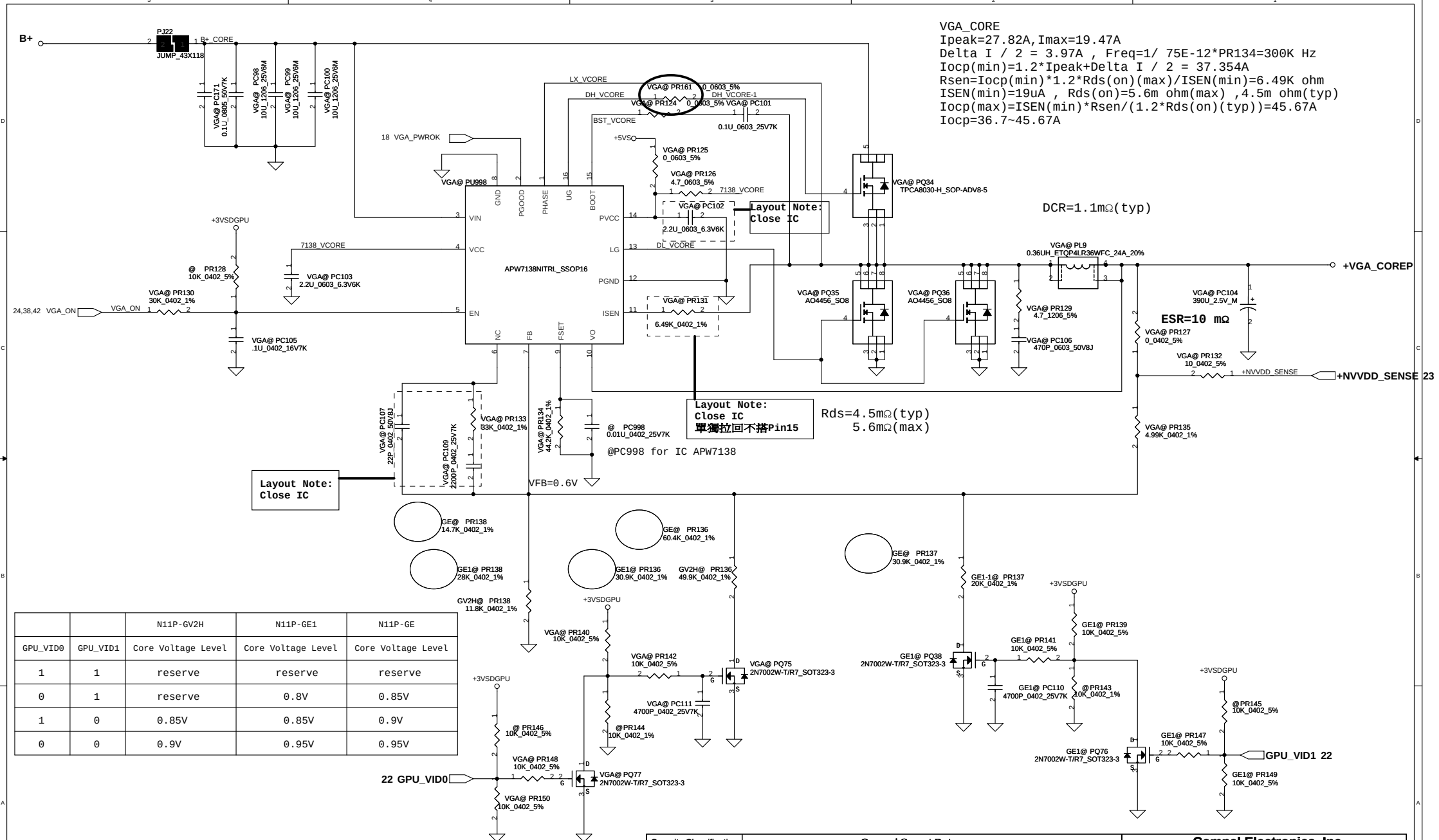

		N11P-GV2H	N11P-GE1	N11P-GE
GPU_VID0	GPU_VID1	Core Voltage Level	Core Voltage Level	Core Voltage Level
1	1	reserve	reserve	reserve
0	1	reserve	0.8V	0.85V
1	0	0.85V	0.85V	0.9V
0	0	0.9V	0.95V	0.95V

Security Classification	Compal Secret Data			Compal Electronics, Inc.
Issued Date	2008/08/10	Deciphered Date	2010/08/01	Title: SCHEMATICS,MB A5893
Size: Custom	Document Number: 401869			Rev: C
Date: Wednesday, June 30, 2010	Sheet 50 of 56			

THIS SHEET OF ENGINEERING DRAWING IS THE PROPRIETARY PROPERTY OF COMPAL ELECTRONICS, INC. AND CONTAINS CONFIDENTIAL AND TRADE SECRET INFORMATION. THIS SHEET MAY NOT BE TRANSFERED FROM THE CUSTODY OF THE COMPETENT DIVISION OF R&D DEPARTMENT EXCEPT AS AUTHORIZED BY COMPAL ELECTRONICS, INC. NEITHER THIS SHEET NOR THE INFORMATION IT CONTAINS MAY BE USED BY OR DISCLOSED TO ANY THIRD PARTY WITHOUT PRIOR WRITTEN CONSENT OF COMPAL ELECTRONICS, INC.

WWW.AliSaler.Com

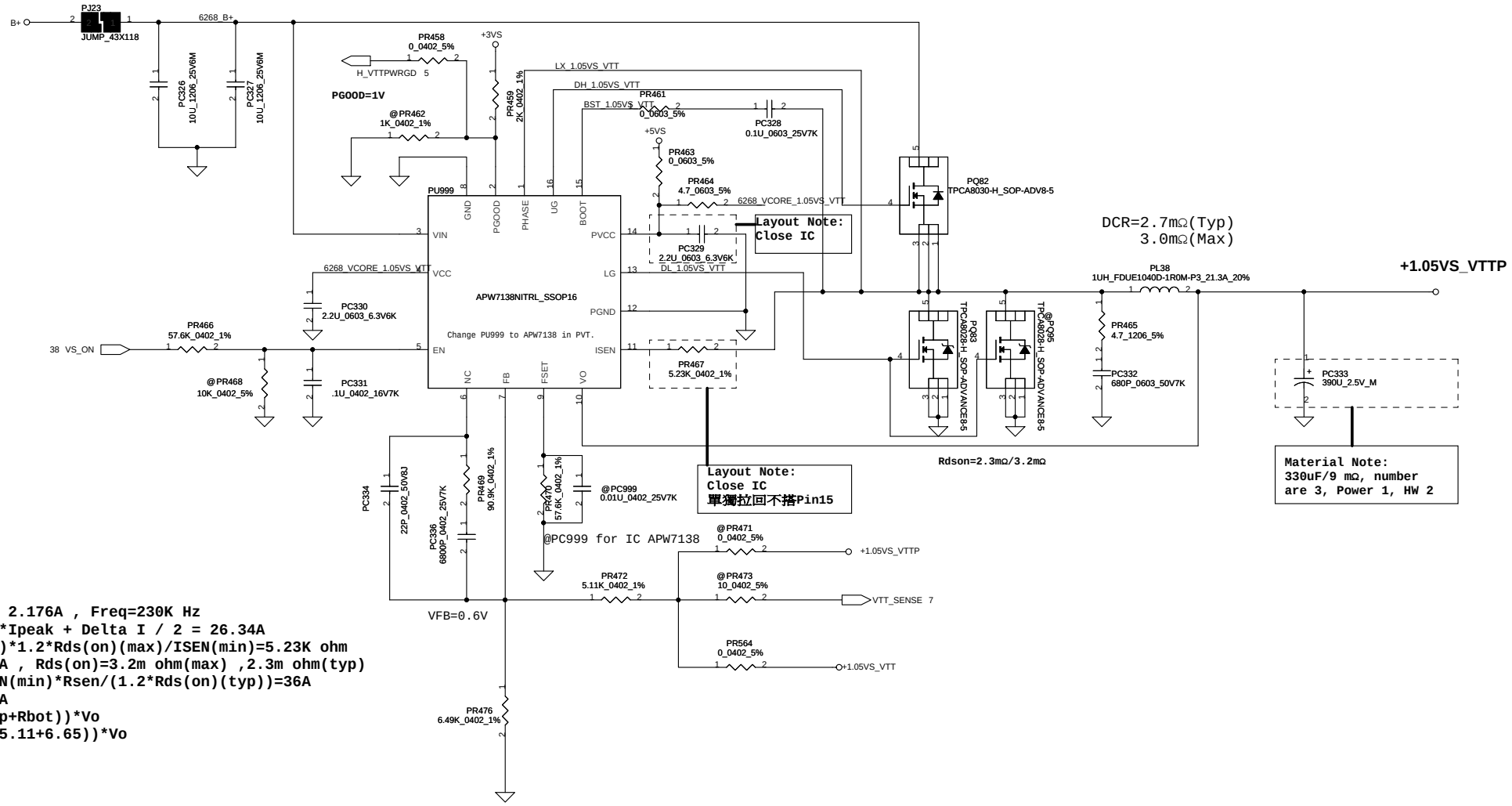

+1.05VS_VTT
Ipeak=20.14A
Imax=14.10A
Delta I / 2 = 2.176A , Freq=230K Hz
Iocp(min)=1.2*Ipeak + Delta I / 2 = 26.34A
Rsen=Iocp(min)*1.2*Rds(on)(max)/ISEN(min)=5.23K ohm
ISEN(min)=19uA , Rds(on)=3.2m ohm(max) ,2.3m ohm(typ)
Iocp(max)=ISEN(min)*Rsen/(1.2*Rds(on)(typ))=36A
Iocp=26.34~36A
Vref=(Rb/(Rtop+Rbot))*Vo
=>0.6=(6.65/(5.11+6.65))*Vo
Vo=1.061V

Security Classification	Compal Secret Data			Compal Electronics, Inc.
Issued Date	2008/08/10	Deciphered Date	2010/08/01	Title: SCHEMATICS,MB A5893
THIS SHEET OF ENGINEERING DRAWING IS THE PROPRIETARY PROPERTY OF COMPAL ELECTRONICS, INC. AND CONTAINS CONFIDENTIAL AND TRADE SECRET INFORMATION. THIS SHEET MAY NOT BE TRANSFERED FROM THE CUSTODY OF THE COMPETENT DIVISION OF R&D DEPARTMENT EXCEPT AS AUTHORIZED BY COMPAL ELECTRONICS, INC. NEITHER THIS SHEET NOR THE INFORMATION IT CONTAINS MAY BE USED BY OR DISCLOSED TO ANY THIRD PARTY WITHOUT PRIOR WRITTEN CONSENT OF COMPAL ELECTRONICS, INC.				Size: Custom / Document Number: 401869 / Rev: C
				Date: Wednesday, June 30, 2010 / Sheet 51 of 56

Intel Auburndale CPU(Integrate Graphics) Ipeak=22A Imax=15A
OCP calculation : Assume DCR=1.1m ohm
G1=Rn/(Rn+Rsum)=0.617
where Rn=PR277 // (PR274+PH3)=5.875k ohm
Rsum=PR269=3.65k ohm
LL=2*Rdroop*G1*DCR/Ri= 6.96m V/A
where Rdroop=PR271=8.66k ohm, Ri=PR283=1.69k ohm
Iocp=OCP Threshold*Rdroop/LL=24.89A

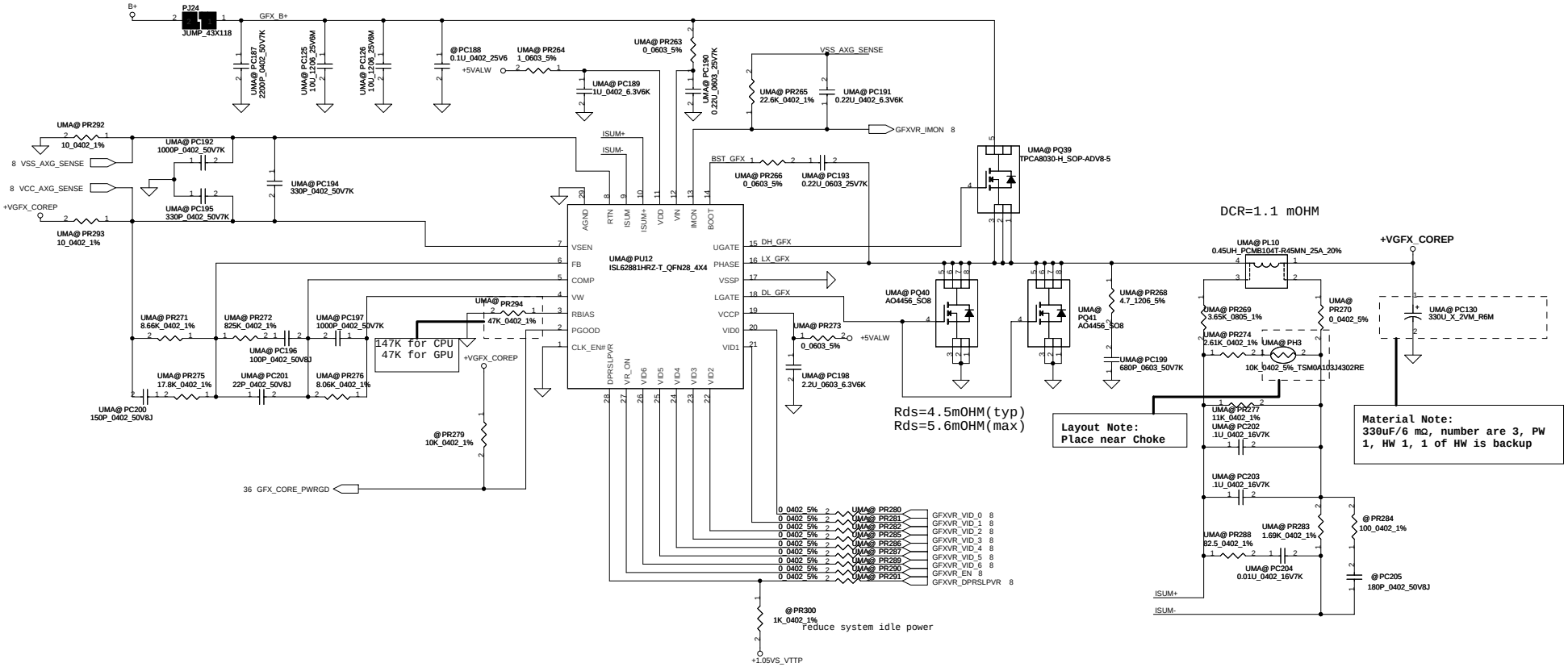

Security Classification	Compal Secret Data			Compal Electronics, Inc.
Issued Date	2008/08/10	Deciphered Date	2010/08/01	Title: SCHEMATICS,MB A5893
				Size: C; Document Number: 401869; Rev: C
				Date: Wednesday, June 30, 2010; Sheet 52 of 56

THIS SHEET OF ENGINEERING DRAWING IS THE PROPRIETARY PROPERTY OF COMPAL ELECTRONICS, INC. AND CONTAINS CONFIDENTIAL AND TRADE SECRET INFORMATION. THIS SHEET MAY NOT BE TRANSFERED FROM THE CUSTODY OF THE COMPETENT DIVISION OF R&D DEPARTMENT EXCEPT AS AUTHORIZED BY COMPAL ELECTRONICS, INC. NEITHER THIS SHEET NOR THE INFORMATION IT CONTAINS MAY BE USED BY OR DISCLOSED TO ANY THIRD PARTY WITHOUT PRIOR WRITTEN CONSENT OF COMPAL ELECTRONICS, INC.

WWW.AliSaler.Com

PH0	PH1	# of PH
0	1	2
1	1	3

	HFM_VID	HFM_Icc	LL	Icc_TDC	Icc_Dyn
Auburndale 45W	1.075	50	1.9m	37	35
Auburndale 35W	0.975	38	1.9m	29	27
Clarksfield SV	0.95	51	1.9m	38	39
Clarksfield XE	0.95	65	TBD	48	TBD

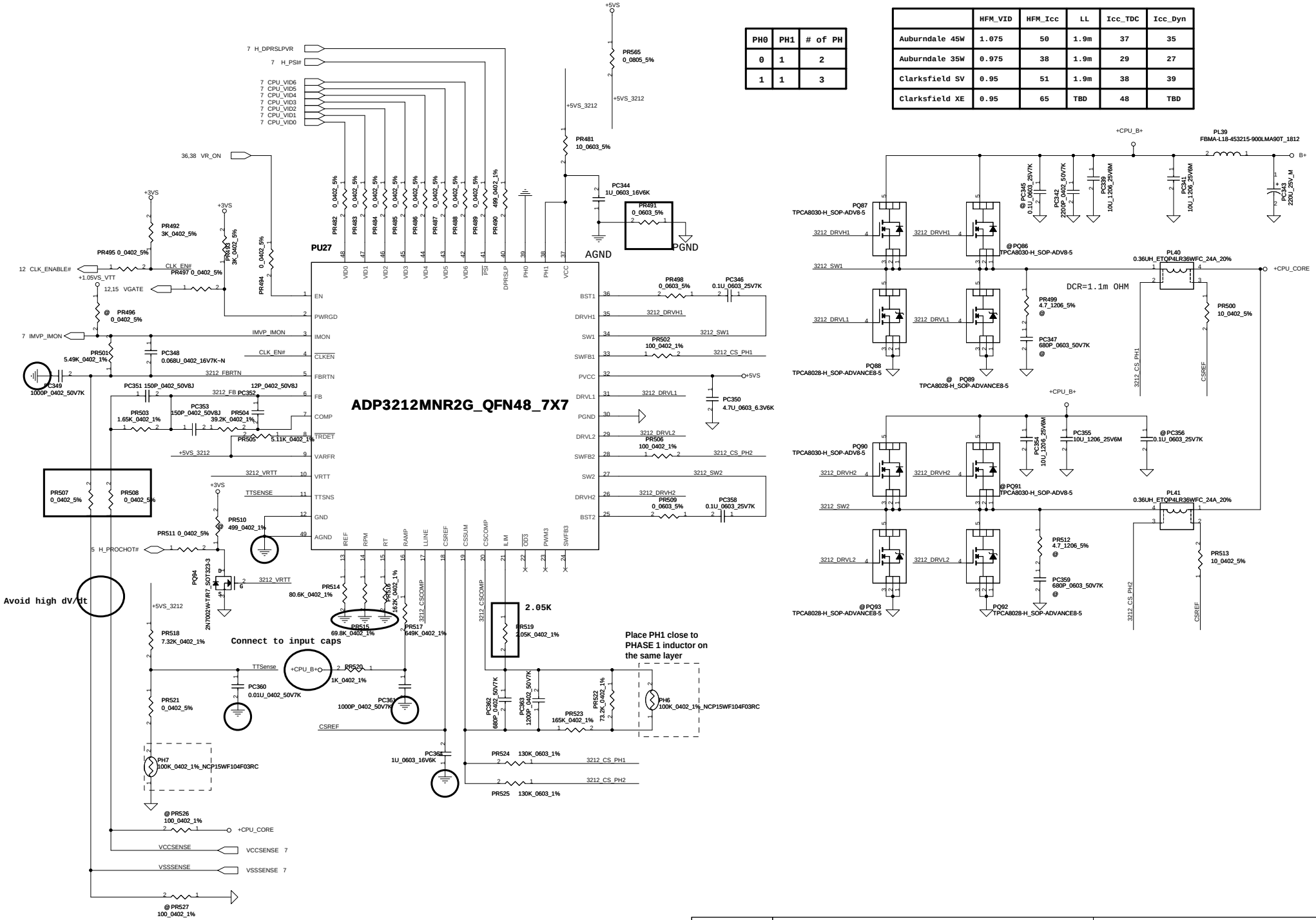

Security Classification	Compal Secret Data		
Issued Date	2009/02/04	Deciphered Date	2010/08/01

THIS SHEET OF ENGINEERING DRAWING IS THE PROPRIETARY PROPERTY OF COMPAL ELECTRONICS, INC. AND CONTAINS CONFIDENTIAL AND TRADE SECRET INFORMATION. THIS SHEET MAY NOT BE TRANSFERED FROM THE CUSTODY OF THE COMPETENT DIVISION OF R&D DEPARTMENT EXCEPT AS AUTHORIZED BY COMPAL ELECTRONICS, INC. NEITHER THIS SHEET NOR THE INFORMATION IT CONTAINS MAY BE USED BY OR DISCLOSED TO ANY THIRD PARTY WITHOUT PRIOR WRITTEN CONSENT OF COMPAL ELECTRONICS, INC.

Compal Electronics, Inc.

Title: **SCHEMATICS,MB A5893**

Size: C | Document Number: **401869** | Rev: C

Date: Wednesday, June 30, 2010 | Sheet 53 of 56

Version change list (P.I.R. List)

for PWR

Item	Fixed Issue	Reason for change	Rev.	PG#	Modify List	Date	Phase
1	Modify VGA_COREP circuit	Reduce component quantity	0.1	50	Change PL9 to SH12036BM00(S COIL .36UH +-20% ETQP4LR36WFC 24A)	2009-1222	PVT
2	Modify CPU_COREP circuit	Arrandale CPU commond design(1 HS, 1LS MOS)	0.1	53	Change PQ89/PQ93 SB00000GL00(S TR TPCA8028-H 1N SOP ADVANCE) BOM structure to @	2009-1222	PVT
3	Modify VGA_COREP circuit	PVT-2 add N11P-GE1 VGA, change VID setting.	0.2	50	Change PR136/PR138 BOM structure to GV2H@ Change PR137/139/141/143/147/149, PC110 and PQ38/76 BOM structure to GE1@	2010-0113	PVT-2
4	Modify +VSBP circuit	Add PC224 for 3VS spike issue	0.2	44	add PC224 to SE000000K80(S CER CAP 1U 6.3V K X5R 0402)	2010-0113	PVT-2
5	Modify +1.05VS_VTTP circuit	Change voltage level from 1.061V to 1.072V.	0.2	51	Change PR476 to SD034649180(S RES 1/16W 6.49K +-1% 0402)	2010-0201	PVT-2
6	Modify +0.75VSP circuit	Change RC for HW timing.(S3 shutdown issue)	0.2	48	Change PR409 to SD034280280(S RES 1/16W 28K +1% 0402) Change PC287 to SE076104K80(S CER CAP .1U 16V K X7R 0402)	2010-0201	PVT-2
7							
8							
9							
10							
11							
12							
13							
14							
15							
16							
17							
18							
19							
20							
21							
22							
23							

WWW.AliSaler.Com

Security Classification	Compal Secret Data		
Issued Date	2008/08/10	Deciphered Date	2010/08/01

THIS SHEET OF ENGINEERING DRAWING IS THE PROPRIETARY PROPERTY OF COMPAL ELECTRONICS, INC. AND CONTAINS CONFIDENTIAL AND TRADE SECRET INFORMATION. THIS SHEET MAY NOT BE TRANSFERED FROM THE CUSTODY OF THE COMPETENT DIVISION OF R&D DEPARTMENT EXCEPT AS AUTHORIZED BY COMPAL ELECTRONICS, INC. NEITHER THIS SHEET NOR THE INFORMATION IT CONTAINS MAY BE USED BY OR DISCLOSED TO ANY THIRD PARTY WITHOUT PRIOR WRITTEN CONSENT OF COMPAL ELECTRONICS, INC.

Compal Electronics, Inc.

Title: SCHEMATICS,MB A5893

Size: Custom | Document Number: 401869 | Rev: C

Date: Wednesday, June 30, 2010 | Sheet 54 of 56

A -->Modify item

Security Classification	Compal Secret Data		
Issued Date	2008/08/10	Deciphered Date	2010/08/01

THIS SHEET OF ENGINEERING DRAWING IS THE PROPRIETARY PROPERTY OF COMPAL ELECTRONICS, INC. AND CONTAINS CONFIDENTIAL AND TRADE SECRET INFORMATION. THIS SHEET MAY NOT BE TRANSFERED FROM THE CUSTODY OF THE COMPETENT DIVISION OF R&D DEPARTMENT EXCEPT AS AUTHORIZED BY COMPAL ELECTRONICS, INC. NEITHER THIS SHEET NOR THE INFORMATION IT CONTAINS MAY BE USED BY OR DISCLOSED TO ANY THIRD PARTY WITHOUT PRIOR WRITTEN CONSENT OF COMPAL ELECTRONICS, INC.

Compal Electronics, Inc.

Title: SCHEMATICS,MB A5893

Size: Custom | Document Number: 401869 | Rev: C

Date: Wednesday, June 30, 2010 | Sheet 55 of 56

BOM Config		
PEW71 SKU N11P-GE DISCRETE ONLY without 3G	BT@,DIS@,DIS ONLY@,NonSG@,71@,X7621@,GE@,NonOPT@	431869B0L21
PEW71 SKU N11P-GV2H-A3 DISCTETE ONLY without 3G	BT@,DIS@,DIS ONLY@,NonSG@,71@,X7621@,GV2H@,GV2HA3@,NonOPT@,NonGE@	431869B0L22

PCB

ZZZ
LA-5893P REV0 M/B

GV2HA2@
U51
N11P-GV2H-A2_BGA969

GV2HA3@
U51
N11P-GV2H-A3_BGA969

GE1@
U51
N11P-GE1-A3 BGA 969P

GE@
U51
N11P-GE-A1 BGA 969P

ZZZ2
X7622@
X76198B0L22

ZZZ1
X7621@
X76198B0L21

ALT. GROUP PARTS 2G HYN **ALT. GROUP PARTS 1G HYN** **ALT. GROUP PARTS 1G SAM**

Security Classification	Compal Secret Data		
Issued Date	2008/08/10	Deciphered Date	2010/08/01

THIS SHEET OF ENGINEERING DRAWING IS THE PROPRIETARY PROPERTY OF COMPAL ELECTRONICS, INC. AND CONTAINS CONFIDENTIAL AND TRADE SECRET INFORMATION. THIS SHEET MAY NOT BE TRANSFERED FROM THE CUSTODY OF THE COMPETENT DIVISION OF R&D DEPARTMENT EXCEPT AS AUTHORIZED BY COMPAL ELECTRONICS, INC. NEITHER THIS SHEET NOR THE INFORMATION IT CONTAINS MAY BE USED BY OR DISCLOSED TO ANY THIRD PARTY WITHOUT PRIOR WRITTEN CONSENT OF COMPAL ELECTRONICS, INC.

Compal Electronics, Inc.

Title: SCHEMATICS,MB A5893

Size: Custom | Document Number: 401869 | Rev: C

Date: Wednesday, June 30, 2010 | Sheet 56 of 56

WWW.AliSaler.Com